Standard

CR-STD-015 ASSET IDENTIFICATION STANDARD

Document No: CRL1-XRL-O6-STD-CR001-00031

Document Reference: CR-STD-015

Custodian
Standards Manager

Please notify the Custodian of all errors, omissions and suggestions for improvement.

Revision:	Date:	Prepared by:	Checked by:	Authorised by:	Reasons for Revision:
9.0	02-08-2017	[redacted]	[redacted]	Chris Sexton	Clarifications to existing requirements

This document contains proprietary information. No part of this document may be reproduced without prior written consent from the chief executive of Crossrail Ltd.

Note:
To be used in accordance with the Crossrail Standards Management Procedure
Document number: CRL1-XRL-O6-GPD-CR001-50001

Learning Legacy Document

Document uncontrolled once printed. All controlled documents are saved on the CRL Document System.
© Crossrail Limited CRL UNCLASSIFIED

Revision Changes (from previous revision)	
Clause/Section Item	**Comment**
All of document	Updates to public facing area generic requirements.

Document history (approved versions only)					
Revision:	**Date:**	**Prepared by:**	**Checked by:**	**Authorised by:**	**Reasons for revision:**
8.0	17-02-2017	[redacted]	[redacted]	Chris Sexton	Reference to public facing labelling guidance
7.0	24-11-2016	[redacted]	[redacted]	Chris Sexton	Clarifications to existing requirements
6.0	01-05-2016	[redacted]	[redacted]	Chris Sexton	Clarifications to existing requirements
5.0	08-09-2015	[redacted]	[redacted]	Chris Sexton	Clarifications to existing requirements
4.0	28-08-2015	[redacted]	[redacted]	Chris Sexton	Clarifications to existing requirements
3.0	1-10-2014	[redacted]	[redacted]	Chris Sexton	Various updates
2.0	01-03-2014	[redacted]	[redacted]	Chris Sexton	Reformat and update
1.1	28-10-2011	[redacted]	[redacted]	CRTG	Minor amendments
1.0	08-07-2011	[redacted]	[redacted]		First formal issue

Learning Legacy Document

Document uncontrolled once printed. All controlled documents are saved on the CRL Document System.

© Crossrail Limited CRL UNCLASSIFIED

Contents Page

1 Purpose 5

2 Scope 5
2.1 Out of Scope 6

3 Definitions 6

4 Key Concepts 7
4.1 General principles 7
4.2 Assets delivered by others 7
4.3 Existing assets 8

5 Asset identification numbering 8

6 Asset description principles 9
6.1 Equipment name structure 9

7 Asset identification labelling 9
7.1 Generic approach 10
7.2 Places, Buildings and Structures 10
7.3 Linear assets 10

8 Label content and format 12
8.1 Generic approach 12
8.2 Label format 12
8.3 Primary Functional Units and Functional Units 13
8.4 Asset Tags 13
8.5 Equipment 14
8.6 Linear assets 14
8.7 Labelling of 'small' assets 14
8.8 Machine readable asset identification 14
8.9 Sizes and legibility 16
8.10 Label colour 16
8.11 Not required 16

9 Label material 16

10 Label positions and fixing 18
10.1 Generic approach 18
10.2 Label positioning 18
10.3 Label fixing 19
10.4 Serialised Equipment 21
10.5 The use of schematics for labelling smaller assets 21
10.6 Unreadable or missing labels 22
10.7 Replacement of labels 22

11 Labelling of 'small' assets 22

12 Abbreviations, definitions and references 22
12.1 Abbreviations and definitions 22
12.2 References 23

13 Appendices 24
13.1 PFU, FU and Asset Tag label dimensions 24
13.2 (Yellow) Equipment label dimensions 25
13.3 'Small' asset label dimensions 26
13.4 Label layouts with explanation of each data element 27
13.5 Label Adhesive Compliance Matrix 28

Learning Legacy Document

Document uncontrolled once printed. All controlled documents are saved on the CRL Document System.

© Crossrail Limited CRL UNCLASSIFIED

Contents Page

Learning Legacy Document

Document uncontrolled once printed. All controlled documents are saved on the CRL Document System.
© Crossrail Limited CRL UNCLASSIFIED

1 Purpose

It is essential that assets can be unambiguously identified in order to prevent operational and safety incidents, prevent abortive work and plan asset intervention activities.

This standard details Crossrail requirements for the identification of assets subject to maintenance/asset management activities. It includes details of asset naming conventions, the style and format of asset identification labels, label fixing requirements and requirements for machine readable identification.

2 Scope

This standard applies to asset identification across the whole Central Section of Crossrail i.e.

- Crossrail Central Operating Section which includes South East Spur & Abbey Wood Station;
- Crossrail Canary Wharf Station;
- Woolwich Station;
- Crossrail assets installed on passenger Rolling Stock, but not the Rolling Stock itself;
- Maintenance trains and plant (Yellow Plant); and
- Plumstead Maintenance (Depot) Facility & Stabling Sidings
- DOO CCTV for all Crossrail Stations (in and out of the central section)

The standard also applies to all Facility types and their assets, for example:

- Station;
- Tunnel;
- Shaft;
- Portal;
- Track;
- Route Section
- Power;
- Signalling & Train Control;
- Communication & Control;
- Control Centre (RCC & BUCF);
- Depots (Signalling and communications interface only);
- Passenger Rolling Stock & Yellow Plant (Signalling and communications interface only);

Requirements for the labelling of assets detailed in this standard apply for the purpose of asset identification to support operation, maintenance and asset management activities only. Requirements for signage to provide directions, information, orientation, warnings, regulations, or restrictions for operational or customer purposes are detailed in other standards on the Standards Baseline.

Learning Legacy Document

Document uncontrolled once printed. All controlled documents are saved on the CRL Document System.

© Crossrail Limited CRL UNCLASSIFIED

2.1 Out of Scope

Items out of scope of this standard are:

- Labelling of assets produced as part of enabling works that will be handed over directly to other parties; and
- Labelling of assets in Over Site Developments.
- Labelling of temporary assets
- Labelling of assets installed by Network Rail on the surface route except where agreed with the Crossrail Project Manager e.g. DOO CCTV.
- All Lifts and Escalators which will be in LU format in accordance with the Pan TfL Contract for all RfL and LUL sites. However, the Crossrail specific works information requirements (within 2B Cl 13.5) continue to apply for other non-L&E assets which interface with Lifts & Escalators and where source /destination detail information is required for assets e.g. cabling.

3 Definitions

The definitions and abbreviations used in this Standard are explained in the Asset Information Glossary (CRL1-XRL-Z3-GUI-CR001-50012).

Learning Legacy Document

Document uncontrolled once printed. All controlled documents are saved on the CRL Document System.

© Crossrail Limited CRL UNCLASSIFIED

4 Key Concepts

A separate document, Crossrail Asset Information Fundamentals (CRL1-XRL-Z3-GPD-CR001-50007), describes a number of the approaches being used by Crossrail for Asset Information Management. Concepts of particular relevance to this Standard are:

- Asset Tag - a place holder for an asset's design requirements and represents the duty (or function) of an asset. An Asset Tag is a uniquely identified position within the railway network performing a specific function, for example, Drainage Pump 1. Please note, the term Asset Tag does not mean Asset Label;
- Equipment - a particular make and model of asset which satisfies the duty of an Asset Tag (where required). Equipment can represent manufactured assets (such as a particular make and model of pump), hardware, software or firmware;
- Serialised or Batch Items - an instance of Equipment with a unique serial identifier or an instance of Equipment that has a single Batch number but can be utilised in discrete quantities e.g. an electric cable; and
- Primary Functional Unit – a group of Asset Tags and/or Functional Units related to each other as part of a single system or structural assembly.
- Functional Unit – a group of Asset Tags related to each other as part of a single subsystem or system.
- Locational Unit – a group of linear Functional Units/Asset Tags which form part of a single system.

4.1 General principles

1. Asset Tags will be recorded down to the level that maintenance/operations are expected to be planned i.e. Individual resistors and bolts are not to be Asset Tags unless they require specific maintenance routines
2. Asset Tags will be recorded to the level of detail specified in any relevant legislation
3. Asset Tags will not be defined in ways that are specific to the current project/organisational boundaries and which may be incorrect if there are organisational changes
4. The specific geographic route of cables/pipes/ducts will not to be recorded
5. All electrical and control parts of a Functional Unit will be recorded as children of the parent Primary Functional Unit to provide explicit relationships to the overall system and to ensure that all core components of the system have a common parent
6. Control Panel/Electrical Panel assets will only represent the panel itself and any switchgear/controls related to the operation of the panel. Individual starters, monitors and controllers will be parented to the Primary Functional Unit or Functional Unit to which they belong
7. The Asset Data Dictionary groups similar or related Classifications close to each other in order to make it easier to find the correct class. The Functional Breakdown will also provide a view of the correct asset Classifications, particularly where 'leaves' of the original Uniclass classification system have been recorded in different 'branches'

4.2 Assets delivered by others

Assets created by other parties on behalf of Crossrail, for example, enabling works by London Underground or Network Rail shall comply with this Standard.

Learning Legacy Document

Document uncontrolled once printed. All controlled documents are saved on the CRL Document System.
© Crossrail Limited CRL UNCLASSIFIED

4.3 Existing assets

Existing assets which may be transferred into Crossrail ownership or be acquired by Crossrail shall also comply with this Standard. Such assets shall only include their original asset identifier in the Tag Name if the risk of not doing so is assessed as unacceptable.

5 Asset identification numbering

Asset Tags, Primary Functional Units and Functional Units will be allocated a unique asset identification number which will be used to identify the asset in AIMS, on asset labels and in other documentation. Asset identification numbers will be structured in the following formats:

- "<Location>-<Function>-nnnnn"

Where:

- <Location> is the code for the Location of the Tag as defined in Crossrail Asset Information Fundamentals (CRL1-XRL-Z3-GPD-CR001-50007)
- <Function> represents the three character code for the Function assigned to the Tag from the Functional Hierarchy, see separate Asset Data Dictionary Master Configuration CRL1-XRL-Z3-ADDSD-CR001-50186.
- nnnnn is a five digit number starting at 00001 and is unique for each combination of Location and Function

For example:

- CR501-BAF-00001
- CR501-CRS-00005
- CR088-SAS-00152

Equipment will have a unique identifier in the following format:

- "EQnnnnnnnn"

Where:

- "EQ" indicates an Equipment type asset
- nnnnnnnn is a unique identifier generated by AIMS

For example:

- EQ00041832

Learning Legacy Document

Document uncontrolled once printed. All controlled documents are saved on the CRL Document System.

© Crossrail Limited CRL UNCLASSIFIED

6 Asset description principles

Clear and consistent approaches to the naming of assets are required to ensure that asset data is easily understood and that asset identification can be achieved more easily. Consistent, and intelligent, naming principles will also enable manipulation of asset data through the use of consistent structured asset names.

Specific requirements for the naming of Asset Tags will be described in the Asset Naming & Labelling Convention Document {CRL1-XRL-Z3-ADDSD-CR001-50413}. Please seek guidance from the CRL Asset Information Team if in doubt.

The Asset Tag name includes all information that features on the label plus additional information which for practical reasons doesn't need to feature on the label.

6.1 Equipment name structure

The format of name for Equipment shall be as follows:

"<CRL ASSET CLASS>-<CRL UNIQUE MANUFACTURER ID>-<OEM MODEL/TYPE>"

Where:

<CRL ASSET CLASS> represents the Crossrail allocated asset class assigned to the Equipment

<CRL UNIQUE MANUFACTURER ID > represents the Crossrail allocated Manufacturer ID assigned to the current Original Equipment Manufacturer (OEM) of the Equipment (N.B. it is important that the original Manufacturer of the Equipment is recorded and not the Supplier of the Equipment)

<OEM MODEL/TYPE> represents the specific model number or type that will allow Equipment to be uniquely identified by the OEM. Where necessary the size of Equipment can be appended to the name both for clarity and if a shared model number is used for different sizes of Equipment

As Equipment can potentially be installed in different locations, the Equipment name should not contain any reference to the location or duty of the Equipment.

If Equipment is configured to meet a particular duty only, and is not interchangeable with other assets of the same class, then the Equipment <MODEL/TYPE> shall be used to provide suitable differentiation.

7 Asset identification labelling

The purpose of asset identification labels is to allow unambiguous identification of assets with sufficient information to allow relevant data for these assets to be found in AIMS, CAD or other asset management systems to support operation, maintenance and asset management activities.

Manufacturers may include other labels on their assets, these optional, manufacturer applied labels should not be removed from the assets and should exist alongside the Crossrail Label.

An Asset Tag & Equipment Labelling Guidance document is available to help support the Contracts with more complex scenarios, document reference CRL1-XRL-Z3-GUI-CR001-50040. This document also provides guidance on label verification. Asset Tag Labels in public facing areas shall be fixed in accordance with CRL-XRL-Z3-GUI-CR001-50071: Public Facing Labelling Guidance

Learning Legacy Document

Document uncontrolled once printed. All controlled documents are saved on the CRL Document System.
© Crossrail Limited CRL UNCLASSIFIED

Details for Signage providing operational, safety or other instructions is specified in other Standards and needs to be complied with alongside this Standard.

7.1 Generic approach

The generic approach to which assets require labelling is as follows:

- Primary Functional Units and Functional Units shall not usually be labelled, unless specified;
- Asset Tags shall usually be labelled (notable exceptions are fixed Civil Structures);
- Equipment that is not serialised, shall not be labelled, unless specified; and
- Equipment that is serialised shall be labelled.

More details on the specific approaches for specific labelling requirements are detailed in the relevant AD4 document (Asset Data Dictionary Document) for each asset Class or Function and related documents for Equipment. .

7.2 Places, Buildings and Structures

For all individual Rooms and areas within a Station, Portal, Shaft. Clear identification and labelling is required identifying that Place. This will allow staff to locate the correct room and in particular will allow the emergency services to be able to positively identify room as part of a Fire Plan or Compliance Plan.

As many of the Crossrail buildings and structures will be linked to existing London Underground buildings and structures, the identification and labelling of Places will conform to London Underground Standards “1-034 Station Area Identification” and “1-035 Location Coding System”. Room numbers are in the format “2/951” representing the level and original purpose of a room and are often referred to as SID Codes (Station Identification).

LCS codes for rooms shall only be issued by the relevant body in London Underground. Applications for room numbers, and fire compliance, must comply with the “LUCT Fire Compliance Procedure” CRL1-XRL-O4-GPD-CR001-50015. Until London Underground has officially issued room numbers, Crossrail designs and documentation shall not identify rooms and places using numbers in a similar format to those issued by London Underground.

7.3 Linear assets

Cables, pipes, ducts and other linear assets installed by Crossrail shall be clearly labelled to ensure correct identification.

Multiple labels shall be required for linear assets:

- At each end of the asset;
- At linear intervals as per the table below;

Linear Asset Type	General Label Spacing	Tunnel Label Spacing
Generic	12m	100m
HV, LV and Earthwire Cables	12m	100m
Data, Control & Fire Cables	100m	
Pipes	100m	

- At points where linear assets pass through walls/floor where they will be labelled on each side of the wall/floor within 500mm of its entry into / exit from a space and within 500mm of each termination.
- Where linear assets cross over/under each other or over/under other assets they will be labelled within 500mm of each side of the crossing.;

Document uncontrolled once printed. All controlled documents are saved on the CRL Document System.
© Crossrail Limited CRL UNCLASSIFIED
Learning Legacy Document

- These intervals may not be possible or indeed practical where cables run through fully enclosed containment

Assets, such as rails and OLE contact bars, where the attachment of physical labels may either restrict the operation or maintenance of the asset, shall not be labelled. Similarly, buried pipes will not be labelled, for example when they are covered by soil/concrete.

For further clarification regarding cable identification please refer to the 'Cable Identification Guidance' document (CRL1-XRL-Z3-GUI-CR001-50029).

Learning Legacy Document

Document uncontrolled once printed. All controlled documents are saved on the CRL Document System.

© Crossrail Limited CRL UNCLASSIFIED

8 Label content and format

Standard content and format of labels will improve the ability of staff to unambiguously identify assets. The sections below detail the content for identification labels for different groups of assets.

8.1 Generic approach

The generic content of all Asset Identification Labels shall contain:

- Crossrail asset identifier;
- Asset Description; and
- Data Matrix barcode.

8.2 Label format

Labels shall be easy to read and shall use Arial or Helv/Helvetica font. The font size of the Asset Description shall be no greater than 2/3 of the font size of the Asset Identifier and shall allow all characters in the Asset Description to fit on the label. All letters shall be capitalised.

A number of standard label layouts are illustrated in sections 13.1, 13.2 and 13.3. These sections illustrate different layouts of label to suit different asset types. 13.4 includes label layouts with further explanation of how each data element of the labels are made up plus other important considerations, layouts include a 'generic label' layout for all types of asset except cabling where individual layouts for 'HV,LV and Earthwire cables' and 'Data, Control & Fire cables' have been provided.

The size of labels will be determined by a balance between visibility for Crossrail staff and avoiding visual intrusion to the public (see section 10.2). Selection of label sizes is specified in Section 8.9

Additionally, space shall be allowed on the label to allow a suitable means of physical fixing to be utilised without obscuring any details of the label. See Appendices for the dimensions and layout of labels.

Data, Control & Fire cables only

The following single character 'Cable Type' codes should be used appropriately on the labels; C=Control, D=Data, E=Earth, P=Power, T=Traction.

Contractor Asset IDs which feature on drawings/schematics must feature on the label too in addition to the asset tag ID (see 13.4 for more detail).

The 'Source' data element on the labels should contain of a three character code which should be agreed with the CRL Asset Information Team e.g. CAB-012 may represent a source cable which runs from cabinet 012.

The 'Destination' data element on the labels should contain of a three character code e.g. CAM-076 may represent a cable which feeds camera 076. Three Character Codes are found in the Asset Tag Naming & Labelling document {CRL1-XRL-Z3-ADDSD-CR001-50413}

Any numeric part of the 'Destination' data element should be in compliance with the 'LUL SOR Interchange Stations Communications Legacy Asset Numbering' document (CRL1-LU-R3-RGN-CR001-50004).

For assets which interface with Lifts & Escalators only the following example syntax shall be used for destination ({Three Character Code}-{Lift or Escalator ID}) e.g. CPL-L4 or CPL-E7.

Learning Legacy Document

Document uncontrolled once printed. All controlled documents are saved on the CRL Document System.
© Crossrail Limited CRL UNCLASSIFIED

HV, LV and Earthwire cables only

The following single character 'Cable Type' codes should be used appropriately on the labels; C=Control, D=Data, E=Earth, P=Power, T=Traction.

Contractor Asset IDs which feature on drawings/schematics must feature on the label too in addition to the asset tag ID (see 13.4 for more detail).

The 'Source' data element on the labels should be agreed with the CRL MEP Engineers but be in line with 13.4 which includes label layouts with further explanation of how each data element of the labels are made up plus other important considerations.

The 'Destination' data element on the labels should be agreed with the CRL MEP Engineers but be in line with 13.4 which includes label layouts with further explanation of how each data element of the labels are made up plus other important considerations.

Any numeric part of the 'Destination' data element should be in compliance with the 'LUL SOR Interchange Stations Communications Legacy Asset Numbering' document (CRL1-LU-R3-RGN-CR001-50004).

For assets which interface with Lifts & Escalators only the following example syntax shall be used for destination ({Three Character Code}-{Lift or Escalator ID}) e.g. CPL-L4 or CPL-E7. Three Character Codes are found in the Asset Tag Naming & Labelling document {CRL1-XRL-Z3-ADDSD-CR001-50413

Other cables

For other cable types a 'generic label' layout should be followed but an asset tag label is required only (see 13.4 for more detail).

8.3 Primary Functional Units and Functional Units

Primary Functional Units and Functional Units will typically not be labelled, but where specified, shall be labelled to ensure unambiguous identification of assets and shall include:

- Crossrail asset identifier;
- Asset Description;
- Asset Class Code
- Data Matrix barcode;

Primary Functional Unit and Functional Unit labels will not be combined with Asset Tag labels as they relate to different concepts.

8.4 Asset Tags

Asset Tags, where specified, shall be represented by a label to ensure unambiguous identification of assets and shall include:

- Crossrail asset identifier;
- Asset Description;
- Asset Class Code
- Data Matrix barcode.

Different information is relevant for cable assets

Asset Tag labels will not be combined with (yellow) Equipment labels as different Equipment assets may be used over the life of the Asset Tag.

Learning Legacy Document

Document uncontrolled once printed. All controlled documents are saved on the CRL Document System.
© Crossrail Limited CRL UNCLASSIFIED

8.5 Equipment

For Equipment that is required to be labelled by Crossrail, the label shall include:

- Crossrail asset identifier;
- Equipment Description;
- Unique serial or batch number;
- Asset Class Code
- Manufacturer ID
- Make/Model
- Data Matrix barcode.

Where existing manufacturer's labels are present on Equipment, these shall be retained. When reasonable to do so, Manufacturers should incorporate labels compliant to this Standard to Equipment during the manufacturing process i.e. before Equipment is delivered to the customer's local warehouse/site, this will save the costs of on-site labelling.

8.6 Linear assets

Linear assets should, if of sufficient size, utilise standard asset label formats. However, some linear assets may not be suitable for labelling as normal operation and maintenance activities may damage or dislodge the labels, for example rails would not be suitable for labelling.

Where existing cables have been labelled according to the document "*Specification for Hand Tag and Trace of Rail Utilities*", document number EW-QMS-P-0217 then identification according to this standard will require these labels to be replaced by labels compliant with this standard.

Cable containment and cable ducts labels are not generally required unless specifically requested by the Crossrail Asset Information Team, Contractors should seek clarification on a case by case basis (e.g. UTX ducts require labelling).

8.7 Labelling of 'small' assets

For a limited range of assets with smaller physical sizes, a slightly different approach can be adopted utilising special format labels which only record the Crossrail asset identifier and Data Matrix bar code. See Section 11 for more details.

8.8 Machine readable asset identification

8.8.1 Assets

Assets shall have up to two forms of machine readable asset identification:

- Optical bar codes that will be engraved or etched on the Asset Identification Label at the time when the label is being created; and
- RFID tags, where specified in the relevant AD4 document.

Barcoding

Optical barcodes shall comply with the following requirements and be compliant with London Underground Limited Standard 1-085 "Fire safety performance of materials":

- Crossrail require barcodes in 2D Data Matrix format to comply with ISO/IEC 16022
- Barcodes should use ECC200 error checking, ASCII data encoding, be dark on a light background and be comparable to the matrix size in the example label layout diagrams

Learning Legacy Document

Document uncontrolled once printed. All controlled documents are saved on the CRL Document System.
© Crossrail Limited CRL UNCLASSIFIED

Barcodes should be laser engraved or thermal transfer printed onto the label such that they will not degrade over time and are suitable for use in an aggressive rail engineering environment

- The Barcode shall only encode the Crossrail AIMS asset ID, e.g. CR501-CDR-00001 or EQ00020187 SN00001
- Bar codes should be sized to fit on the Crossrail Asset Identification Label, shall retain readability in dirty rail environments, where possible.

Figure 1 - Example Data Matrix asset identification

RFID Tags

Where RFID Tags are specified, they shall be fixed adjacent to the Crossrail Asset Identification Labels. The Tags shall comply with the following requirements:

- RFID Tags shall be UHF tags that comply with ISO 18000-6C;
- RFID Tags shall be passive Tags;
- RFID Tags shall be Write Once Read Many times (WORM) Tags;
- The RFID Tags shall be encoded with the AIMS Asset ID e.g. CR501-CDR-00001 and shall be consistent with the information encoded in the optical barcode;
- RFID Tags shall be suitable for 'On Metal' application and provide a read range of at least 2m;
- RFID Tags shall be encapsulated and protected to IP68, a minimum temperature range of -20^{0}C to +50^{0}C, vibration resistant to BS EN 60068-2 and chemical resistant; and
- RFID Tags shall be mechanically fixed adjacent to the Crossrail Asset Identification Label.

8.8.2 Equipment

Equipment that is not serialised (i.e. does not have a serial or batch number) will not be required to have machine readable labels. Wherever possible, Manufacturers should apply Crossrail Asset Identification Labels during Equipment manufacture;

Serialised Equipment shall incorporate machine readable asset identification in the form of an optical bar code attached to the Equipment, see Section 8.5.

Equipment Barcoding

Optical barcodes for Equipment shall comply with the following requirements:

- Crossrail would prefer barcodes in 2D Data Matrix format to comply with ISO/IEC 16022, however, 1D format barcode labels may be accepted in special circumstances

Barcodes should use ECC200 error checking, ASCII data encoding

- Barcodes should be laser engraved onto (yellow) Equipment labels so that they will not degrade over time and are suitable for use in an aggressive rail engineering environment

Learning Legacy Document

Document uncontrolled once printed. All controlled documents are saved on the CRL Document System.

© Crossrail Limited CRL UNCLASSIFIED

- Bar codes should be sized to fit on the Crossrail Asset Identification Label, shall retain readability in dirty rail environments, where possible.
- This barcode on the label will record the Crossrail Equipment ID followed by the unique serial number or batch number of the Equipment

8.9 Sizes and legibility

Label sizes shall be one of the standard size labels specified in Section 13 (when practical) with the actual selection of size being decided as follows:

- For non-passenger facing areas (also check section 10.2), the size of label used shall be the smallest practicable size based on the standard label sizes listed in Section 13 so long as the size of the label does not restrict visibility of the asset or access to it for operational and maintenance purposes; or
- For passenger facing areas (also check section 10.2), the size of label used shall be the smallest practicable size that can be easily read without visual aids by a person standing at the normal point of access based on the standard label sizes listed in Section 13.

8.10 Label colour

The following label colours shall be used:

- Primary Functional Units, Functional Units and Asset Tags – Black text on white/metallic background
- Equipment – Black text on a yellow background

Where specified, stainless steel labels laser engraved utilising black text can be used. Typically, such labels will be used in public facing areas on assets with metallic finishes, a less expensive and encouraged option is metallic coloured rigid multi-layer acrylic sheets, laser engraved to form the characters on each label.

8.11 Not required

The main purpose of asset identification labels is the unambiguous identification of assets, therefore additional information, such as asset attributes, configuration information, related assets etc. shall not be included on asset identification labels.

9 Label material

Where a Crossrail Asset Identification Label is required, possible materials that can be used (which must be compliant with London Underground Limited Standard 1-085 “Fire safety performance of materials”) for labels include:

- Flexible labels made from zero halogen, low toxicity, radiation cross linked UV stabilised polyolefin sheet
- Rigid multi-layer acrylic sheets, laser engraved to form the characters on each label
- Stainless steel labels, laser engraved in black to form the characters on each label (bear in mind this is not a low cost option so should be utilised sparingly) a less expensive and encouraged option is metallic coloured rigid multi-layer acrylic sheets, laser engraved to form the characters on each label.
- A combination of the above flexible labels and aluminium or similar type rigid backing materials may be used (as long as the whole life of the combined composite products will not naturally deteriorate and the combined cost is not inordinate).

The following decision diagram should be used to conclude which label material is appropriate:

Learning Legacy Document

Document uncontrolled once printed. All controlled documents are saved on the CRL Document System.
© Crossrail Limited CRL UNCLASSIFIED

Label Material Decision Tree

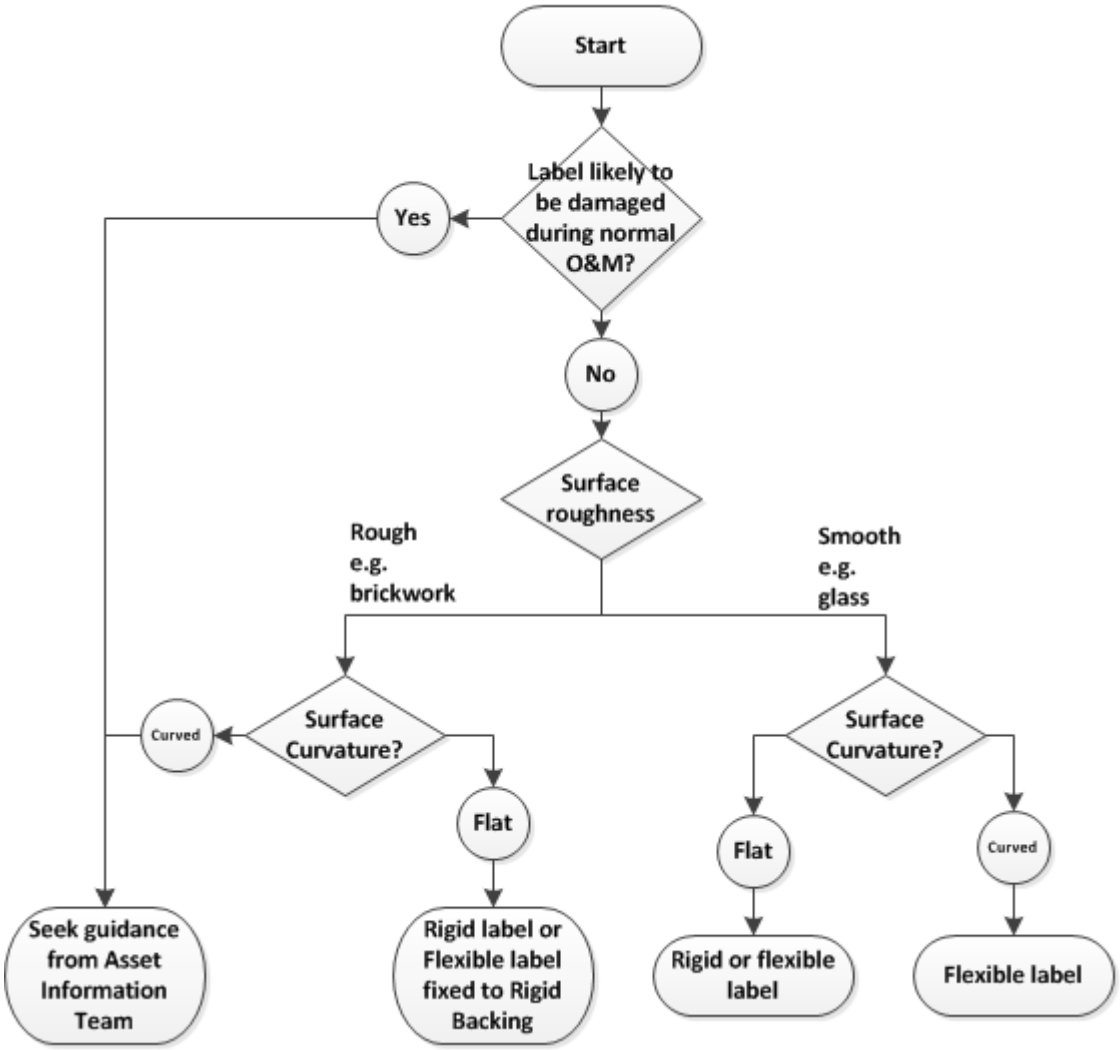

Learning

Document uncontrolled once printed. All controlled documents are saved on the CRL Document System.
© Crossrail Limited CRL UNCLASSIFIED

10 Label positions and fixing

10.1 Generic approach

Asset Identification Labels shall refer to a single asset only. The only exception covers assets whose size would result in the labels either obscuring the asset or restricting access to it. In such cases, a schematic diagram may be used to identify assets down to Asset Tag level, see Section 10.5.

10.2 Label positioning

Generic guide to label positioning is as follows:

For label positioning and installation arrangements a separate 'Label Positioning and Installation Document' is recommended this would typically include images of the assets in question, the position of each label, the appropriate size for each label, any relevant materials and tools to support fixing and where appropriate the authorised (e.g. formally agreed with CRL, see 10.3) adhesive type being used for a particular label type. It is also sensible to include a label installation schedule.

Definition of a Public Facing Area

An area the general public can be expected to access during normal non-emergency circumstances.

Public Facing Area and External Envelope Considerations

Labels in public facing areas or an external envelope of an element of infrastructure shall be out of public sight except where the absence of a clearly visible label will compromise safety

- Labels shall be located by competent designers so that the architecture of public facing areas and external envelopes is not adversely affected
- Labels shall be located unobtrusively and coordinated with adjacent signage where practical
- Labels shall be the smallest practicable size that can be clearly read without visual aids by maintenance personnel standing at the normal point of access
- If it is not practical for a label to be out of public sight the Contractor shall consult the CRL Asset Information Team who will seek advice from a relevant Architect for a derogation before labels are applied
- Asset Tag Labels (white/metallic) should be placed adjacent to the asset or close to it e.g. on the asset fixing bracket
- Serialised Equipment Labels (yellow) shall be placed on the equipment

Further guidance is available for assets in public facing areas CRL1-XRL-Z3-GUI-CR001-50071: Public Facing Labelling Guidance Generic Considerations

Labels to be positioned where they will not obstruct the operation and maintenance of assets and will not be damaged by normal operation and maintenance activities;

Labels to be positioned facing the normal method of access to the asset;

If an asset is inaccessible, or would be impractical to label directly, for example, a pump in a wet well, a fan inside ducting, a sensor behind cladding etc. Then the Asset Tag label should be attached at the nearest adjacent point where it is unambiguous which asset is being referred to, for example:

- Adjacent to the local isolation point for the asset;

Learning Legacy Document

Document uncontrolled once printed. All controlled documents are saved on the CRL Document System.
© Crossrail Limited CRL UNCLASSIFIED

- At the top of the drainage pump's guide rail;
- Adjacent to the access panel in the acoustic cladding;
- On ducting adjacent to the fan;

Asset Tag labels should not be attached to the Equipment fulfilling the duty of the Asset Tag;

Serialised (yellow) Equipment labels should be attached to the Equipment but shall not impair performance of the Equipment

If in doubt, seek guidance before proceeding

Civil/ structural assets will not typically be labelled, due to the overall size of many such assets, unless specified otherwise.

For mechanical, electrical or plant Asset Tags, labels shall be positioned as follows:

- Asset Tag labels shall be positioned on the plinth or base that the Equipment is fixed to;
- If there is no plinth, Asset Tag labels shall be positioned on an adjacent wall, so long as it is not greater than 1000mm from the Asset Tag and that there will be no confusion about the Asset Tag being referred to;
- If there is no plinth and no wall within 1000mm, then the Asset Tag label will be positioned on the floor adjacent to the Asset Tag.

For cables, pipes and linear assets, label shall be positioned as follows:

- For single linear assets the Asset Tag label shall be attached to the surface the linear asset is fixed to, immediately above that asset;
- For multiple linear assets there is a risk of misidentification, therefore the Asset Tag label shall be attached to the asset itself;
- (Yellow) Equipment labels will only be attached to the linear asset if deemed appropriate by the Employer after joint review with the Contractor;
    - (Yellow) Equipment labels are not required on cables.
- Cable labels shall be positioned in accordance with requirements specified in section 7.3

For instrumentation, switchgear and electrical assets, label shall be positioned as follows:

- For Asset Tags located in equipment cabinets, the Asset Tag label will be positioned at the top left corner of the cabinet door, so long as it does not obstruct operation. If this is not acceptable, the label can be positioned at the bottom left corner of the cubicle door or in a consistent position throughout.
- For surface mounted equipment, the Asset Tag label will be positioned on the wall/surface and fixed immediately above the equipment
- If a point asset splits across multiple rooms it should be labelled in all rooms at the wall/floor penetration

10.3 Label fixing

The fixing method for labels shall be by mechanical attachment through predrilled holes or slits (e.g. for some cable labels where cable ties are appropriate) in the label, compliant adhesive may additionally be used to further strength the bond of the label to a surface. Fixing can be by screw, rivet, metal tie or PA66 cable tie, so long as the fixing does not damage the label, does not obscure any details of the label and will not become loose under

Learning Legacy Document

Document uncontrolled once printed. All controlled documents are saved on the CRL Document System.
© Crossrail Limited CRL UNCLASSIFIED

normal operational circumstances. If holes need to be drilled to fix a label, they shall not damage the structural integrity or function of an asset and shall be no larger than required. Where holes are drilled into concrete or masonry, suitable fixing plugs shall be used to ensure secure attachment.

The edge of all fixing holes shall be no closer than 3mm from the edge of the label and no closer than 5mm from the edge of the Data Matrix code.

The adhesive fixing of asset labels shall conform to the requirements specified in the 'Label Adhesive Compliance Matrix' (see 13.5 for document reference). Conformity to these requirements must be formally agreed with the Employer before use.

If labels are to be affixed to curved surfaces, then the choice of label material should be suitable to ensure that the label is not damaged by being affixed to the curved surface. Data Matrix codes do not read reliably when mounted on curved surfaces, in order to avoid problems reading labels on curved surfaces, the following criteria must be met:

- The label shall only curve in one direction;
- The label shall not be stretched or distorted; and
- The minimum radius surface that the label is attached to is 15mm.
- The following decision diagram should be used to conclude which label fixing arrangement is appropriate:

Learning Legacy Document

Document uncontrolled once printed. All controlled documents are saved on the CRL Document System.

© Crossrail Limited CRL UNCLASSIFIED

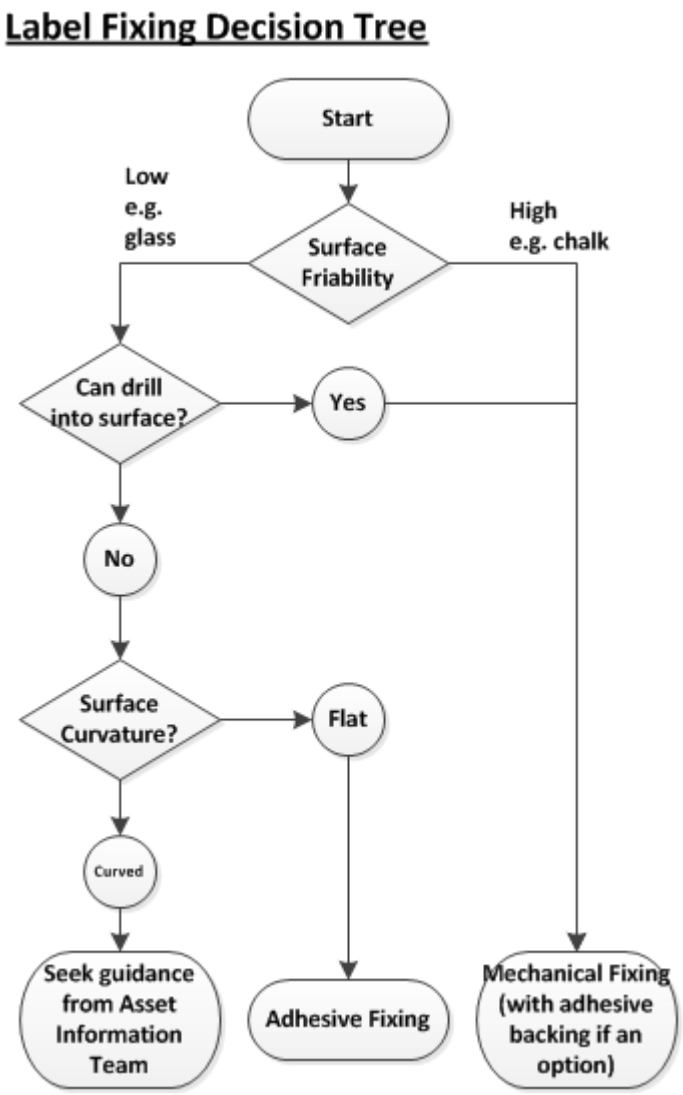

10.4 Serialised Equipment

Labels for Serialised Equipment shall be directly attached to the asset and, where possible, labels shall be applied before the Equipment is supplied to Crossrail, typically the sooner the better, during the manufacturing process is ideal, failing that before installation. Any serialised equipment which is to be installed *without* a label must have a rational reason for doing so and the Crossrail Asset Information Team consulted.

If the physical size or configuration of the asset means that this is impractical, or obscures the asset, then labelling can be included on an adjacent schematic diagram (see Section 10.5).

10.5 The use of schematics for labelling smaller assets

If the size or nature of Asset Tags is such that it is not practicable to label them individually, for example, large numbers of small assets positioned close to each other, and then an appropriate schematic diagram can be used. The requirements for such diagrams are:

- The Schematic Diagram shall be sufficiently durable that it will not degrade or be damaged during normal railway operation over the expected life of the assets;
- Diagram materials must comply with London Underground Limited Standard 1-085 “Fire safety performance of materials”

Document uncontrolled once printed. All controlled documents are saved on the CRL Document System.
© Crossrail Limited CRL UNCLASSIFIED

- Diagrams shall be mechanically fixed to a wall or suitable fixed structure adjacent to the assets being identified
- Schematic diagrams shall provide a clear illustration of assets so that they can be unambiguously identified
- The orientation of Schematic Diagrams should align with the physical orientation of assets when viewed from the Schematic Diagram
- Diagrams shall include all required details that would be expected on the Crossrail Asset Identification Label
- Diagrams shall only include details of the Asset Tags being identified and their Data Matrix barcodes
- Serialised Equipment shall be identified by an additional list showing the Asset Tag and its related Equipment. If Serialised Equipment is replaced, then this list shall be updated with the new asset identification details

Such schematic diagrams shall be stored in eB in an editable format.

10.6 Unreadable or missing labels

If a Crossrail Asset Identification Label is missing or has become unreadable, then it shall be replaced within 24 hours. If the supply and fixing of a permanent label compliant with this standard will take greater than 24 hours, then, a temporary label shall be utilised, as long as it contains the required identification information and its material complies with London Underground Limited Standard 1-085 “Fire safety performance of materials”.

10.7 Replacement of labels

If changes to the details of an asset mean that the Crossrail Asset Identification Label is no longer correct, then it shall be replaced within 24 hours. If the supply and fixing of a permanent label compliant with this standard will take greater than 24 hours, then, a temporary label shall be utilised, as long as it contains the required identification information and its material complies with London Underground Limited Standard 1-085 “Fire safety performance of materials”.

Where a Crossrail Asset Identification Label needs to be replaced, then the replacement label shall comply with this Standard.

11 Labelling of ‘small’ assets

For a range of assets with smaller physical sizes, a slightly different approach can be used Please refer to the Asset Naming & Labelling document (CRL1-XRL-Z3-ADDSD-CR001-50413) and seek advice from the Crossrail Asset Team if required.

12 Abbreviations, definitions and references

12.1 Abbreviations and definitions

The definitions and abbreviations used in this Standard are explained in the Asset Information Glossary (CRL1-XRL-Z3-GUI-CR001-50012).

Learning Legacy Document

Document uncontrolled once printed. All controlled documents are saved on the CRL Document System.
© Crossrail Limited CRL UNCLASSIFIED

12.2 References

CRL	
CR-XRL-Z3-XIG-CR001-00016	Document Numbering and Master Coding Spreadsheet
CR-XRL-Z1-GGG-CR001-00002	Crossrail Editorial Style Guide
CRL1-XRL-Z3-GUI-CR001-50029	Cable Identification Guidance
CRL1-XRL-Z3-GUI-CR001-50040	Asset Tag & Equipment Labelling Guidance
CRL1-XRL-Z3-GUI-CR001-50071	Public Facing Labelling Guidance
London Underground	
LUL 1-004	Signage for operational purposes
LUL 1-034	Station area identification
LUL 1-035	Location Coding System
LUL 1-085	Fire safety performance of materials
LUL 1-120	Power Cable Route Design, Testing and Recovery Requirements
LUL G-050	Civil engineering common requirements
CRL1-LU-R3-RGN-CR001-50004	LUL SOR Interchange Stations Communications Legacy Asset Numbering

Learning Legacy Document

Document uncontrolled once printed. All controlled documents are saved on the CRL Document System.

© Crossrail Limited CRL UNCLASSIFIED

13 Appendices

13.1 PFU, FU and Asset Tag label dimensions

The drawings of PFU, FU and Asset Tag labels on the following pages show examples of the different configurations of labels for these types. These drawings also show the dimensions of each type of label. Also there is a specific Asset Tag label for Tunnel Rings only.

Please refer to the following drawings:

Asset Tag Labels

CRL1-XRL-G-DDA-CR001-00015 A4.pdf

CRL1-XRL-G-DDA-CR001-00017 A4.pdf

CRL1-XRL-G-DDA-CR001-00019 A4.pdf

PFU/FU Labels

CRL1-XRL-G-DDA-CR001-00074 A4.pdf (PFU)

CRL1-XRL-G-DDA-CR001-00075 A4.pdf (FU)

Tunnel Ring Labels

CRL1-XRL-G-DDA-CR001-00073 A4.pdf

Learning Legacy Document

Document uncontrolled once printed. All controlled documents are saved on the CRL Document System.

© Crossrail Limited CRL UNCLASSIFIED

CR513-HVA-00299

DAMPER 047

L75612-VCD-PF-14

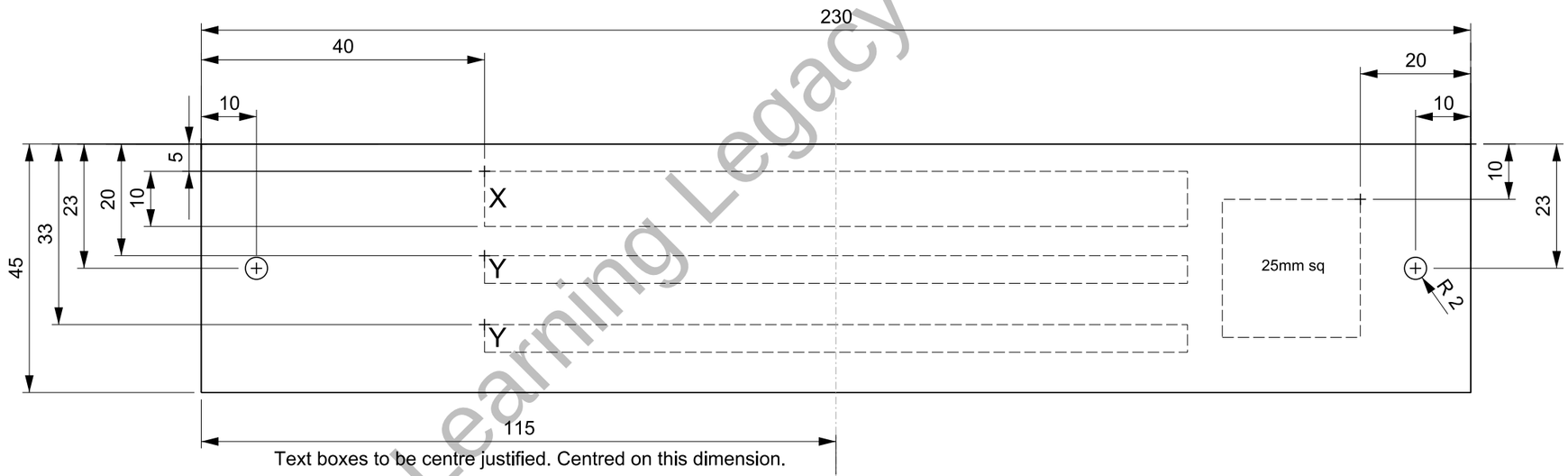

Text boxes to be centre justified. Centred on this dimension.

FONT SIZE:
- BOX X - 10MM
- BOX Y - 5MM

BAR CODE BOX:
- 25MM x 25MM

Rev.	Date	Description	By	Chkd	App	Auth
P03	07/07/2011	CR data matrix revised	HC	EN	KWW	
P04	07/07/2011	CR Data Matrix updated	HC	WD	EN	
P05	16/09/2011	Location of holes moved	HC	MH	GS	
P06	01/07/2013	Font Sizes Addes	PB	HC	JM	
P07	20/08/2015	Text Boxes Centre Justified	LW	LW	MH	
P08	07/11/2016	Asset Tag Information updated	PB	LW	MH	

Notes:

- All dimensions are in millimeters unless otherwise specified

Crossrail Limited
25 Canada Square
Canary Wharf
London
E14 5LQ

© Crossrail

www.crossrail.co.uk

Scale : 1:1 @ A3

Contract : Crossrail Line 1 Programme
Originator : Crossrail Technical
Location : Crossrail General
Title : Asset Management
Tag Label for Equipment - CR
CR - Label - 230x45mm

By : P.BORREGO
Chk : L.WILSON
App : M.HOPPER

Drg No : CRL1-XRL-G-DDA-CR001-00015 | Rev : P08 | Suit : S4 | Auth : ---

Fit for authorisation

RESTRICTED

Copy Approved for Design - Created: 07-NOV-2016

Learning Legacy Document

CR513-HVA-00299

DAMPER 047

L75612-VCD-PF-14

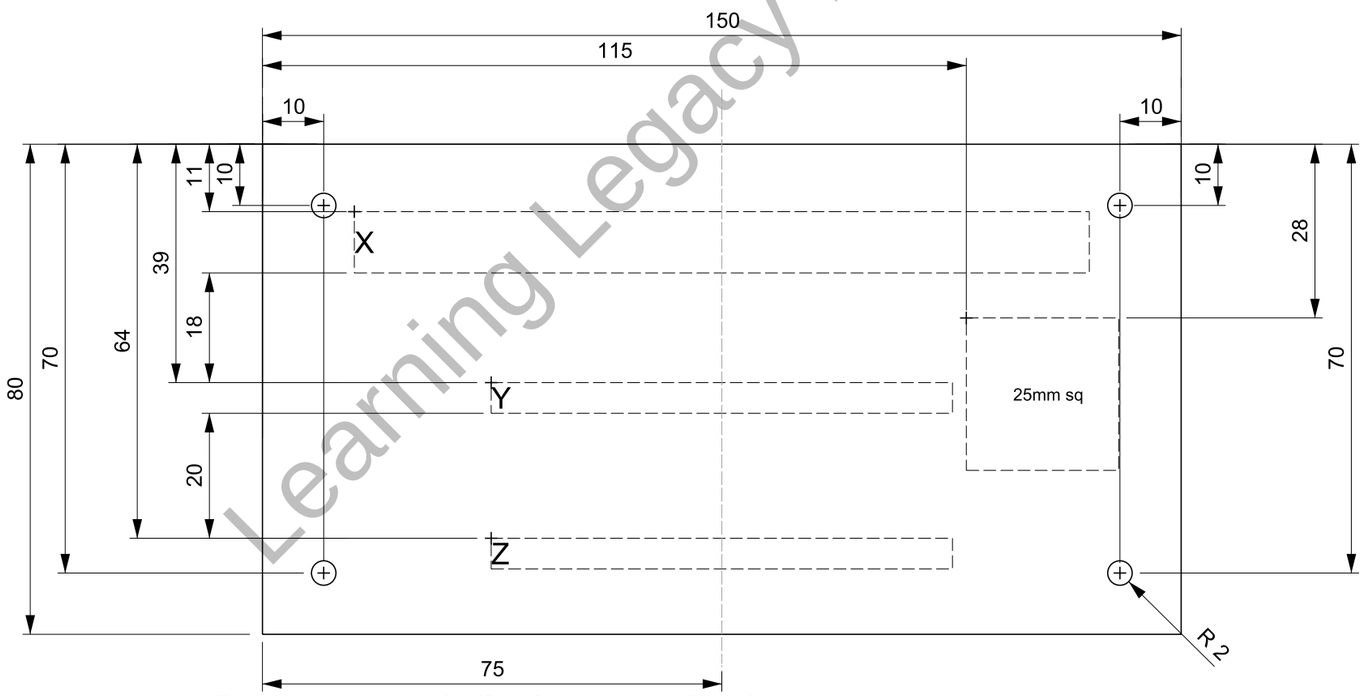

Text boxes to be centre justified. Centred on this dimension.

FONT SIZE:
- BOX X - 10MM
- BOX Y - 5MM

BAR CODE BOX:
- 25MM x 25MM

Rev.	Date	Description	By	Chkd	App	Auth
P04	07/07/2011	CR Data Matrix updated	HC	WD	EN	---
P05	16/09/2011	Location of holes moved	HC	MH	GS	---
P06	28/06/2013	Font Sizes Added	PB	HC	MH	---
P07	01/07/2013	CR Data Updated	PB	HC	JM	---
P08	20/08/2015	Drawing Title Updated	LW	LW	MH	---
P09	07/11/2016	Asset Tag Information updated	PB	LW	MH	---

Notes:
- All dimensions are in millimeters unless otherwise specified

Crossrail Limited
25 Canada Square
Canary Wharf
London
E14 5LQ

© Crossrail

www.crossrail.co.uk

Scale : 1:1 @ A3

Contract : Crossrail Line 1 Programme
Originator : Crossrail Technical
Location : Crossrail General
Title : Asset Management
Tag Label for Equipment - CR
CR - Label - 150x80mm

By : P.BORREGO
Chk : L.WILSON
App : M.HOPPER

Drg No : CRL1-XRL-G-DDA-CR001-00017
Rev : P09
Suit : S4
Auth : ---

Fit for authorisation

RESTRICTED

Copy Approved for Design - Created: 07-NOV-2016

Learning Legacy Document

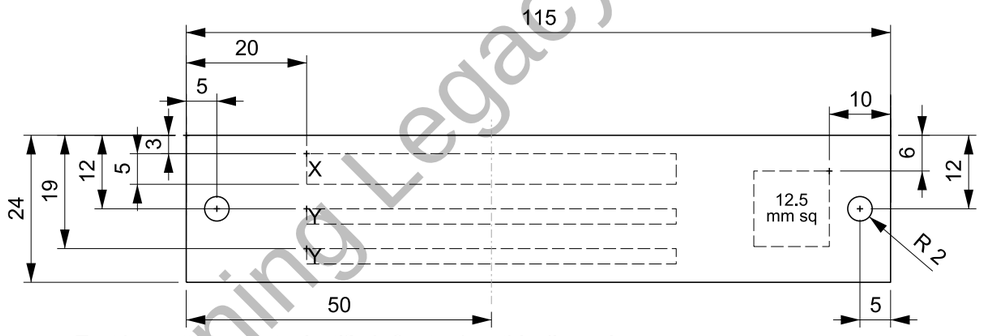

Text boxes to be centre justified. Centred on this dimension.

FONT SIZE:
- BOX X - 5MM
- BOX Y - 2.5MM

BAR CODE BOX:
- 12.5MM x 12.5MM

Rev.	Date	Description	By	Chkd	App	Auth
P04	07/07/2011	---	HC	WD	EN	-
P05	14/09/2011	Layout changed	HC	MH	GS	-
P06	16/09/2011	Location of holes moved	HC	MH	GS	-
P07	01/07/2013	Font Sizes Added	PB	HC	JM	-
P08	20/08/2015	Drawing Title Updated	LW	LW	MH	-
P09	07/11/2016	Asset Tag Information updated	PB	LW	MH	-

Notes:
- All dimensions are in millimeters unless otherwise specified

Crossrail Limited
25 Canada Square
Canary Wharf
London
E14 5LQ

© Crossrail

www.crossrail.co.uk

Scale : 1:1 @ A3

Contract : Crossrail Line 1 Programme
Originator : Crossrail Technical
Location : Crossrail General
Title : Asset Management
Tag Label for Equipment - CR
CR - Label - 115x23mm

By : P.BORREGO
Chk : L.WILSON
App : M.HOPPER

Drg No : CRL1-XRL-G-DDA-CR001-00019
Rev : P09
Suit : S4
Auth : ---

Fit for authorisation

RESTRICTED

Copy Approved for Design - Created: 07-NOV-2016

Learning Legacy Document

Generic PFU Labelling

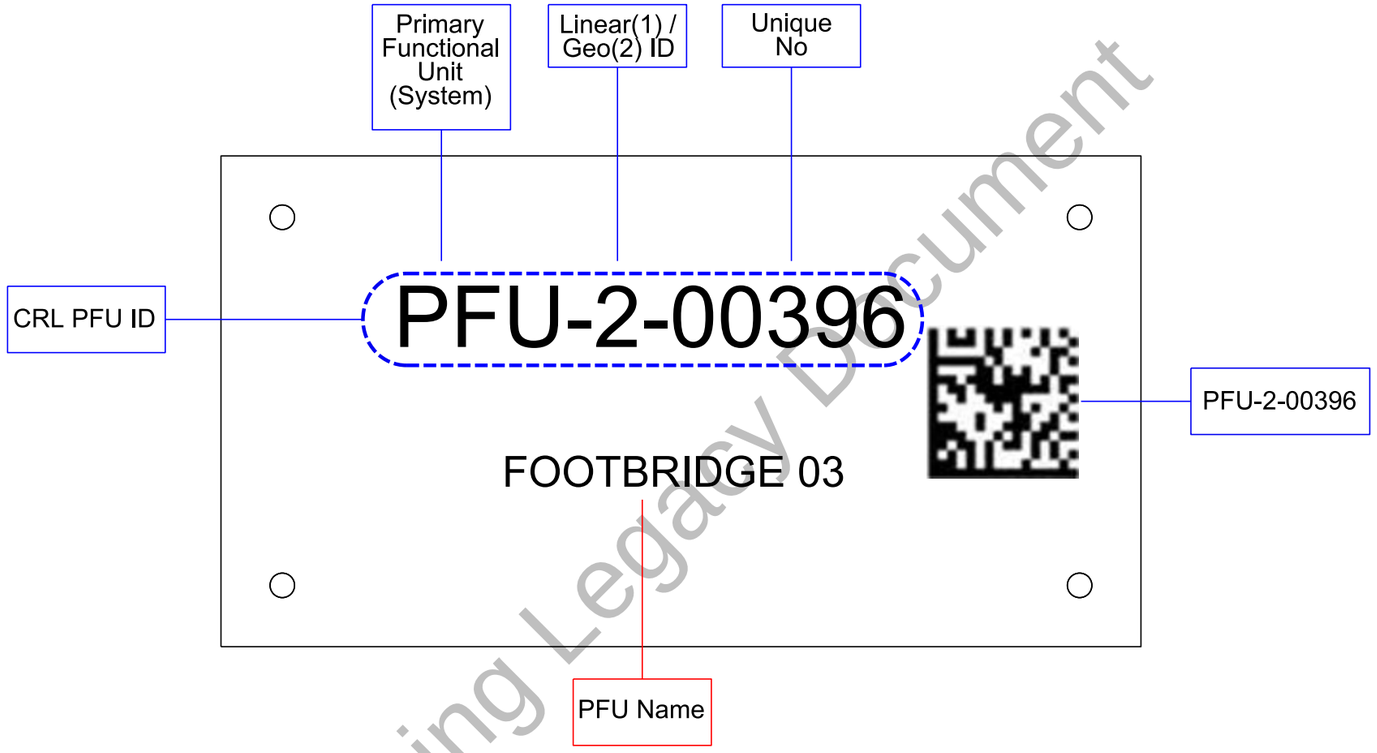

Learning Legacy Document

Copy Approved for Design - Created: 18-NOV-2016

Rev.	Date	Description	By	Chkd	App	Auth
P01	07/11/2016	First Issue	PB	LW	MH	-
P02	18/11/2016	Changed to PFU Label	PB	LW	MH	-

Notes:

Crossrail Limited
25 Canada Square
Canary Wharf
London
E14 5LQ
www.crossrail.co.uk

© Crossrail

Scale : 1:1 @ A3

Contract : Crossrail Line 1 Programme
Originator : Crossrail Ltd
Location : Crossrail General
Title : Asset Management
Generic PFU Labelling Information

By : P.BORREGO
Chk : L.WILSON
App : M.HOPPER

Drg No : CRL1-XRL-G-DDA-CR001-00074
Rev : P02
Suit : S4
Auth : ---

Fit for authorisation

RESTRICTED

Generic FU Labelling

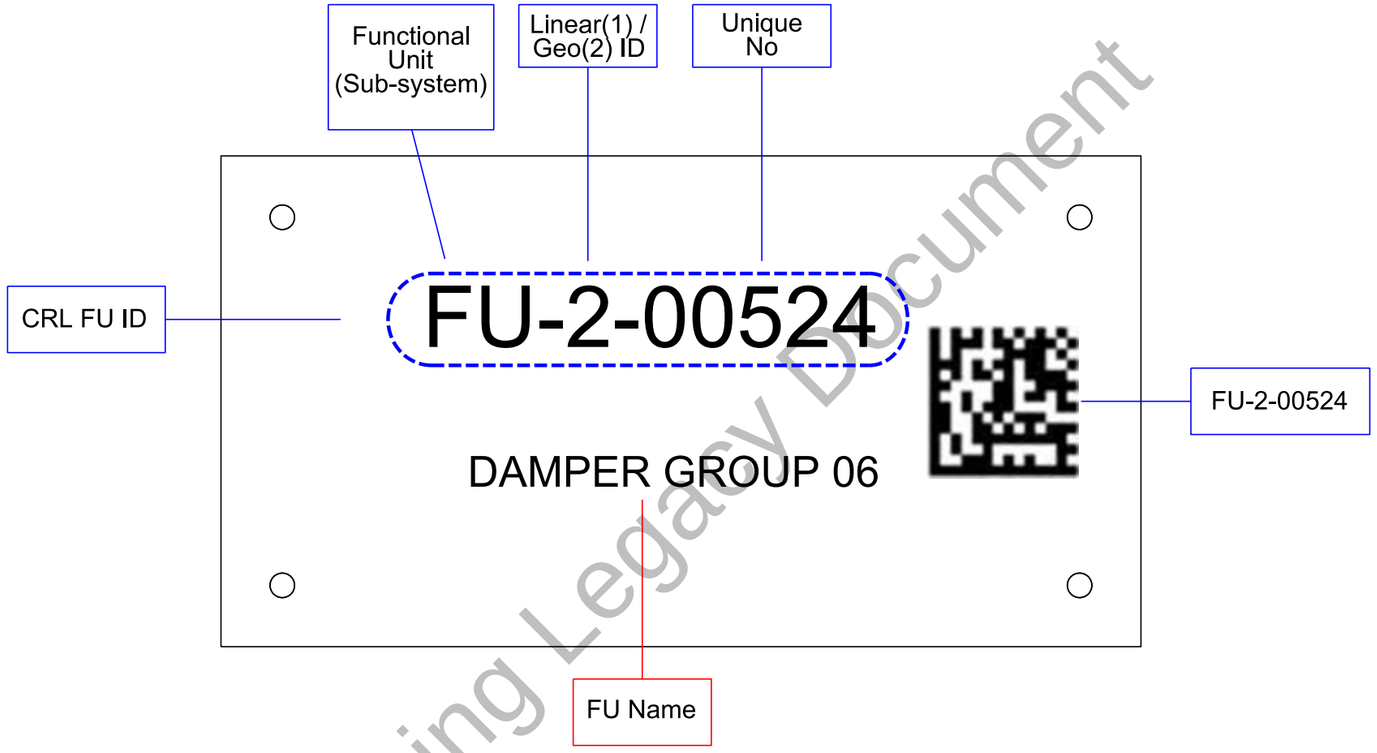

Learning Legacy Document

Copy Approved for Design - Created: 18-NOV-2016

Rev.	Date	Description	By	Chkd	App	Auth
P01	18/11/2016	First Issue	PB	LW	MH	-

Notes:

Crossrail Limited
25 Canada Square
Canary Wharf
London
E14 5LQ

© Crossrail

www.crossrail.co.uk

Scale : 1:1 @ A3

Contract : Crossrail Line 1 Programme
Originator : Crossrail Ltd
Location : Crossrail General
Title : Asset Management
Generic FU Labelling Information

By : P.BORREGO
Chk : L.WILSON
App : M.HOPPER

Drg No : CRL1-XRL-G-DDA-CR001-00075
Rev : P01
Suit : S4
Auth : ---

Fit for authorisation

RESTRICTED

ROUTE ID CODE LIST

C.EB -	Crossrail Route, East Bound (from datum point to Stepney Green Junction)
C.WB -	Crossrail Route, West Bound (from datum point to Stepney Green Junction)
CNE.EB -	Crossrail Route, North East Section, East Bound
CNE.WB -	Crossrail Route, North East Section, West Bound
CSE.EB -	Crossrail Route, South East Section, East Bound
CSE.WB -	Crossrail Route, South East Section, West Bound

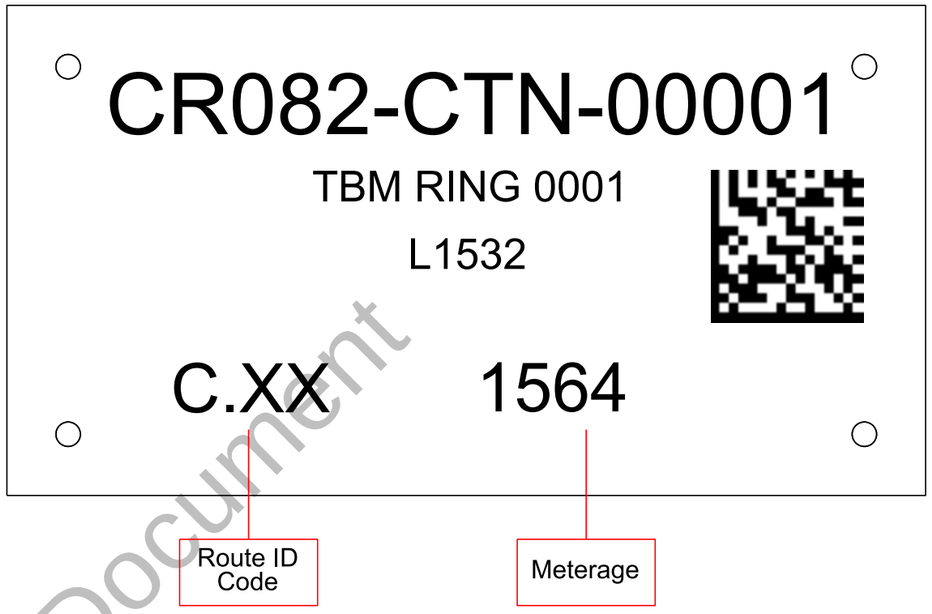

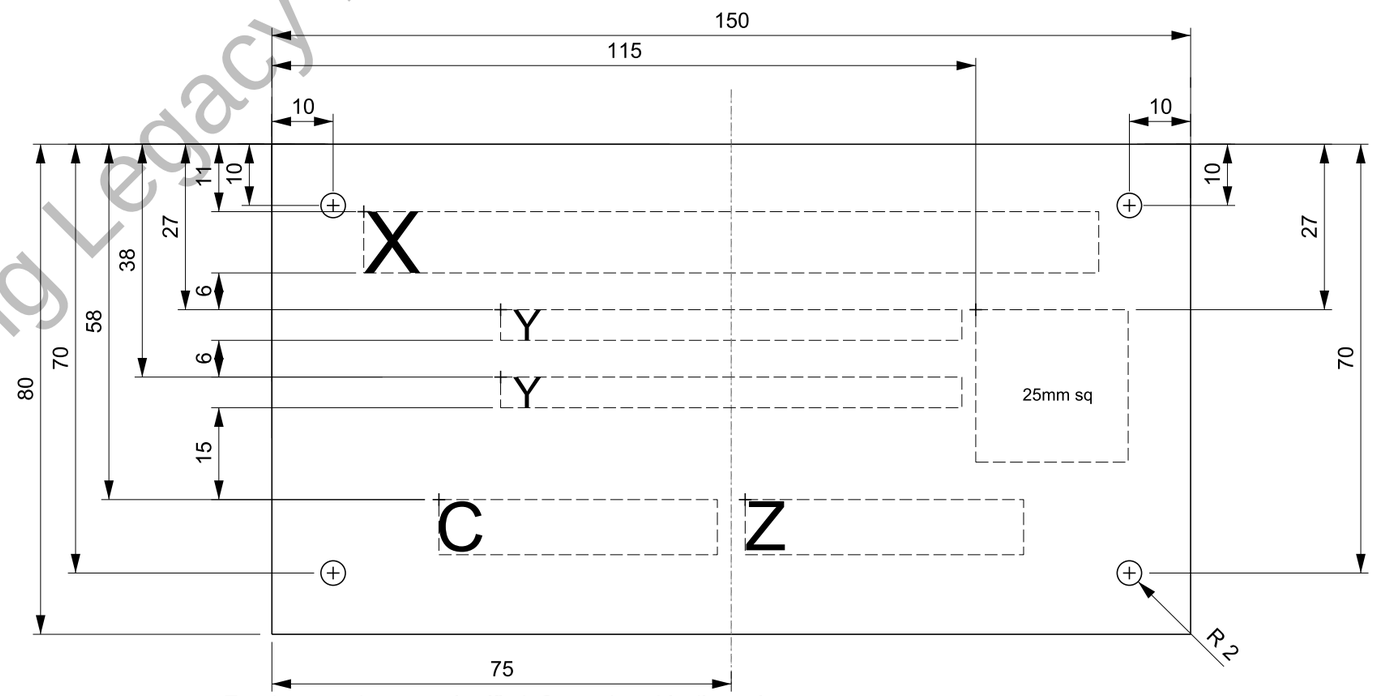

Text boxes to be centre justified. Centred on this dimension.

FONT SIZE:
- BOX X - 10MM
- BOX Y - 5MM
- BOX Z - 8MM
- BOX C - 8MM

BAR CODE BOX:
- 25MM x 25MM

Rev.	Date	Description	By	Chkd	App	Auth
P01	18/10/2016	First Issue	PB	LW	MH	-
P02	21/11/2016	Route ID Code incorporated	PB	LW	MH	-
P03	14/06/2017	Ring and Meterage Text Updated	PB	LW	MH	-

Notes:
- All dimensions are in millimeters unless otherwise specified

Crossrail Limited
25 Canada Square
Canary Wharf
London
E14 5LQ

© Crossrail

www.crossrail.co.uk

Scale : 1:1 @ A3

Contract : Crossrail Line 1 Programme
Originator : Crossrail Ltd
Location : Crossrail General
Title : Asset Management
Asset Tag Label for Tunnel Rings - CR
CR - Label - 150x80mm

By : P.BORREGO
Chk : L.WILSON
App : M.HOUGHTON

Drg No : CRL1-XRL-G-DDA-CR001-00073
Rev : P03
Suit : S4
Auth : ---

Fit for authorisation

RESTRICTED

Learning Legacy Document

Copy Approved for Design - Created: 15-JUN-2017

13.2 (Yellow) Equipment label dimensions

The drawings of (yellow) Equipment labels on the following pages show examples of the four different configurations of labels for Equipment. These drawings also show the dimensions of each type of label.

Please refer to the following drawings:

CRL1-XRL-G-DDA-CR001-00016 A4.pdf

CRL1-XRL-G-DDA-CR001-00018 A4.pdf

CRL1-XRL-G-DDA-CR001-00020 A4.pdf

Learning Legacy Document

Document uncontrolled once printed. All controlled documents are saved on the CRL Document System.

© Crossrail Limited CRL UNCLASSIFIED

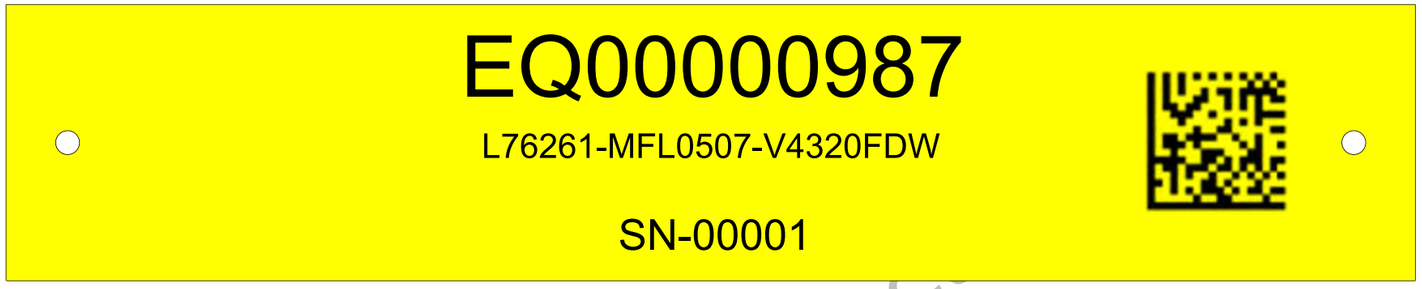

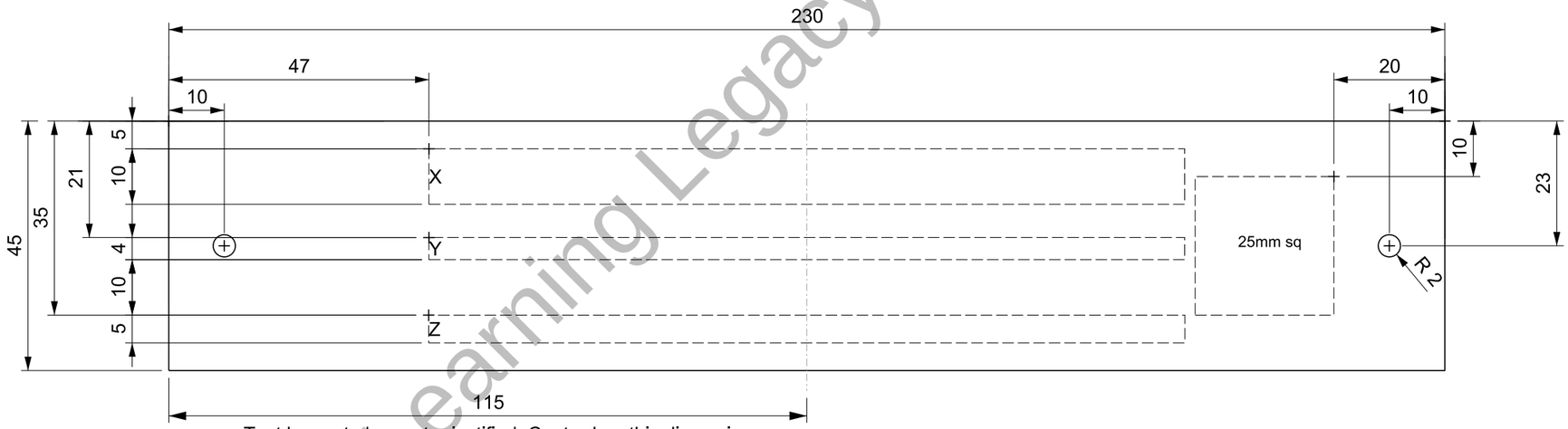

Text boxes to be centre justified. Centred on this dimension.

FONT SIZE:
- BOX X - 10MM
- BOX Y - 4MM
- BOX Z - 5MM

BAR CODE BOX:
- 25MM x 25MM

Rev.	Date	Description	By	Chkd	App	Auth
P03	14/09/2011	Layout changed	HC	MH	GS	---
P04	16/09/2011	Location of holes moved	HC	MH	GS	---
P05	01/07/2013	Font Sizes Added	PB	HC	JM	---
P06	20/08/2015	Drawing Title Updated	LW	LW	MH	---
P07	21/08/2015	---	LW	LW	LW	---
P08	07/11/2016	Equipment Information updated	PB	LW	MH	---

Notes:
- All dimensions are in millimeters unless otherwise specified

Crossrail Limited
25 Canada Square
Canary Wharf
London
E14 5LQ

© Crossrail

www.crossrail.co.uk

Scale : 1:1 @ A3

Contract : Crossrail Line 1 Programme
Originator : Crossrail Technical
Location : Crossrail General
Title : Asset Management
Tag Label for Equipment - EQ
EQ - Equipment - 230x45mm

By : P.BORREGO
Chk : L.WILSON
App : M.HOPPER

Drg No : CRL1-XRL-G-DDA-CR001-00016
Rev : P08
Suit : S4
Auth : ---

Fit for authorisation

RESTRICTED

Copy Approved for Design - Created: 07-NOV-2016

Learning Legacy Doc

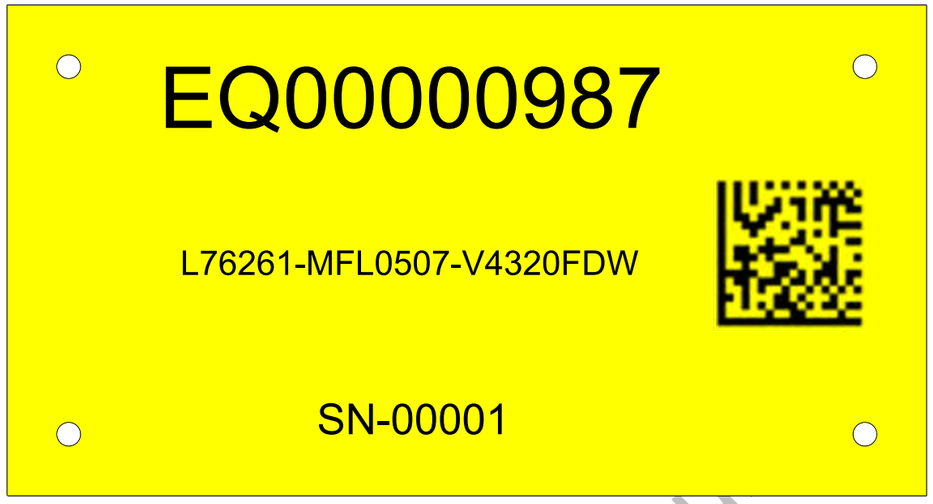

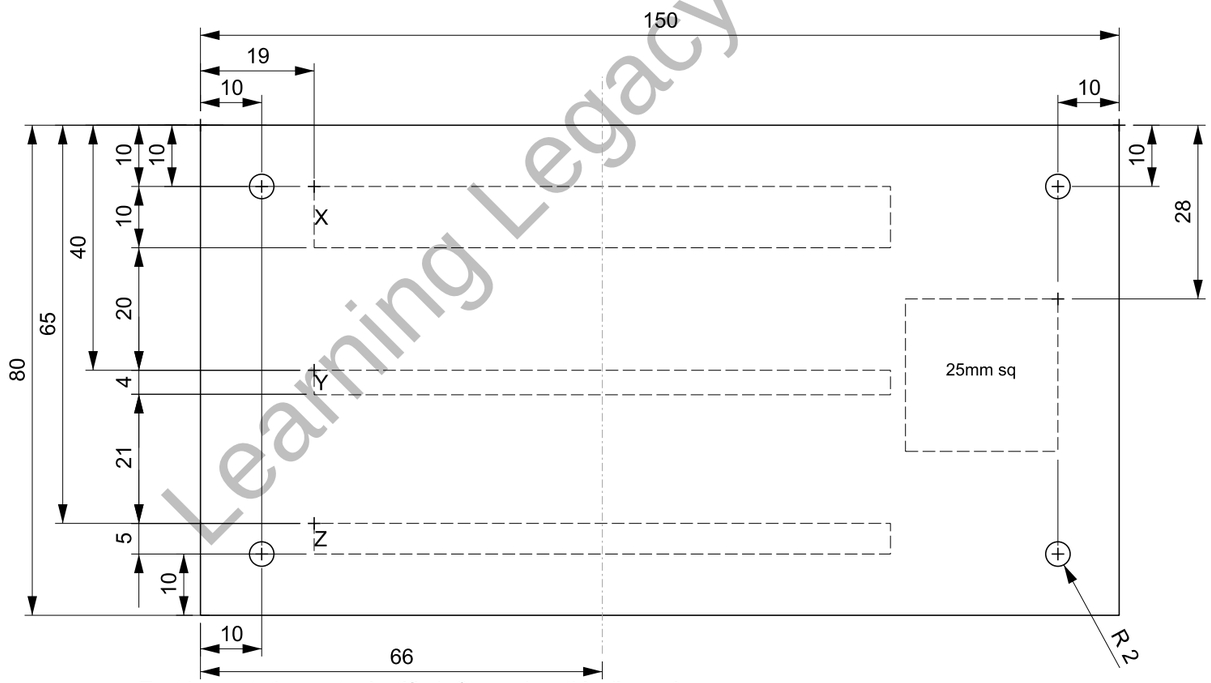

Text boxes to be centre justified. Centred on this dimension.

FONT SIZE:
- BOX X - 10MM
- BOX Y - 4MM
- BOX Z - 5MM

BAR CODE BOX:
- 25MM x 25MM

Rev.	Date	Description	By	Chkd	App	Auth
P02	05/07/2011	Data matrix re-attached	HC	EN	KWW	---
P03	14/09/2011	Layout changed	HC	MH	GS	---
P04	16/09/2011	Location of holes moved	HC	MH	GS	---
P05	01/07/2013	Font Sizes Added	PB	HC	JM	---
P06	20/08/2015	Drawing Title Updated	LW	LW	MH	---
P07	07/11/2016	Equipment Information updated	PB	LW	MH	---

Notes:
- All dimensions are in millimeters unless otherwise specified

Crossrail Limited
25 Canada Square
Canary Wharf
London
E14 5LQ

© Crossrail

www.crossrail.co.uk

Scale : 1:1 @ A3

Contract : Crossrail Line 1 Programme
Originator : Crossrail Technical
Location : Crossrail General
Title : Asset Management
Tag Labels for Equipment - EQ
EQ - Equipment - 150x80mm

By : P.BORREGO
Chk : L.WILSON
App : M.HOPPER

Drg No : CRL1-XRL-G-DDA-CR001-00018
Rev : P07
Suit : S4
Auth : ---

RESTRICTED

Fit for authorisation

Copy Approved for Design - Created: 07-NOV-2016

Learning Legacy Docu

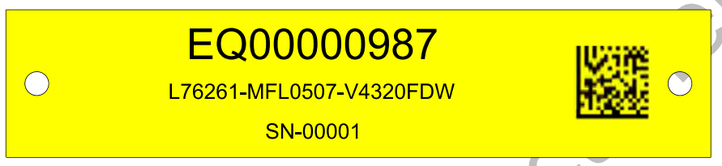

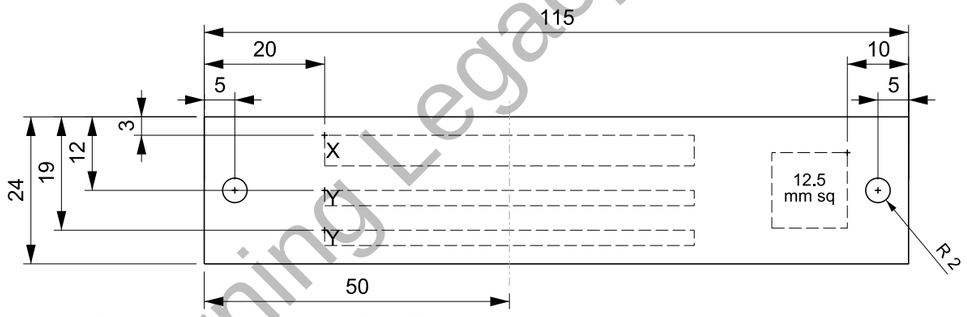

Text boxes to be centre justified. Centred on this dimension.

FONT SIZE:
- BOX X - 5MM
- BOX Y - 2.5MM
- BOX Z - 2.5MM

BAR CODE BOX:
- 12.5MM x 12.5MM

Rev.	Date	Description	By	Chkd	App	Auth
P02	05/07/2011	Data matrix re-attached	HC	EN	KWW	---
P03	14/09/2011	Layout changed	HC	MH	GS	---
P04	16/09/2011	Position of hole corrected	HC	MH	GS	---
P05	01/07/2013	Font Sizes Added	PB	HC	JM	---
P06	20/08/2015	Drawing Title Updated	LW	LW	MH	---
P07	07/11/2016	Equipment Information updated	PB	LW	MH	---

Notes:
- All dimensions are in millimeters unless otherwise specified

Crossrail Limited
25 Canada Square
Canary Wharf
London
E14 5LQ
© Crossrail
www.crossrail.co.uk

Scale : 1:1 @ A3

Contract : Crossrail Line 1 Programme
Originator : Crossrail Technical
Location : Crossrail General
Title : Asset Management
Tag Label for Equipment - EQ
EQ - Equipment - 115x23mm

By : P.BORREGO
Chk : L.WILSON
App : M.HOPPER

Drg No : CRL1-XRL-G-DDA-CR001-00020
Rev : P07
Suit : S4
Auth : ---

RESTRICTED
Fit for authorisation

Copy Approved for Design - Created: 07-NOV-2016

Learning Legacy Document

13.3 'Small' asset label dimensions

The drawings of labels on the following pages show examples of the different configurations of labels for Tags and Equipment. These drawings also show the dimensions of each type of label.

Please refer to the following drawing:

CRL1-XRL-G-DDA-CR001-00022 A4.pdf

CRL1-XRL-G-DDA-CR001-00042 A4.pdf

CRL1-XRL-G-DDA-CR001-00067 A4.pdf

Learning Legacy Document

Document uncontrolled once printed. All controlled documents are saved on the CRL Document System.

© Crossrail Limited CRL UNCLASSIFIED

CR513-HVA-00299

DAMPER 047

L75612-VCD-PF-14

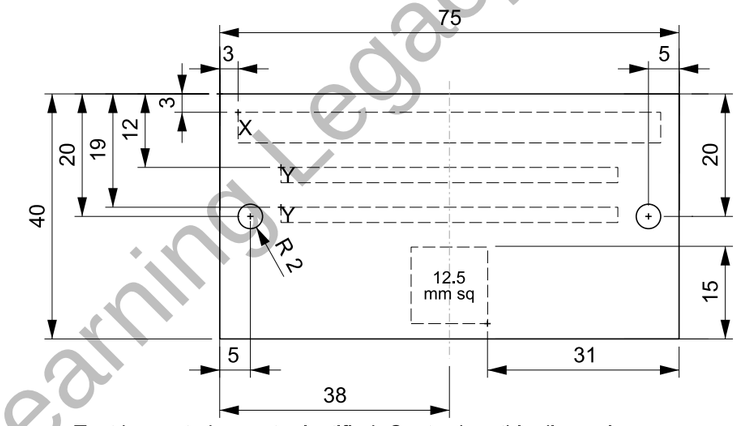

Text boxes to be centre justified. Centred on this dimension.

FONT SIZE:
- BOX X - 5MM
- BOX Y - 2.5MM

BAR CODE BOX:
- 12.5MM x 12.5MM

Rev.	Date	Description	By	Chkd	App	Auth
P01	14/09/2011	First Issue	HC	MH	GS	---
P02	01/07/2013	Font Sizes Added	PB	HC	JM	---
P03	20/08/2015	Label Updated	LW	LW	MH	---
P04	07/11/2016	Asset Tag Information updated	PB	LW	MH	---

Notes:
- All dimensions are in millimeters unless otherwise specified

Crossrail Limited
25 Canada Square
Canary Wharf
London
E14 5LQ

© Crossrail

www.crossrail.co.uk

Scale : 1:1 @ A3

Contract : Crossrail Line 1 Programme
Originator : Crossrail Technical
Location : Crossrail General
Title : Asset Management
Tag Label for Equipment -CR
CR -Label - 75x40mm

By : P.BORREGO
Chk : L.WILSON
App : M.HOPPER

Drg No : CRL1-XRL-G-DDA-CR001-00022 | Rev : P04 | Suit : S4 | Auth : ---

Fit for authorisation

RESTRICTED

Copy Approved for Design - Created: 07-NOV-2016

Learning Legacy Document

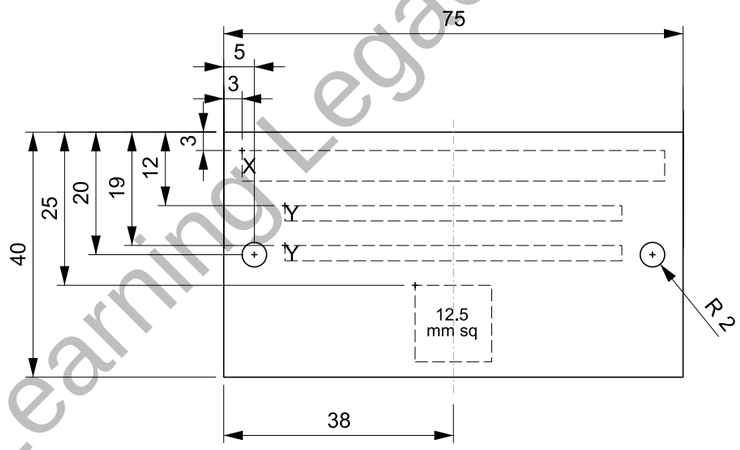

Text boxes to be centre justified. Centred on this dimension.

FONT SIZE:
- BOX X - 5MM
- BOX Y - 2.5MM
- BOX Z - 2.5MM

BAR CODE BOX:
- 12.5MM x 12.5MM

Rev.	Date	Description	By	Chkd	App	Auth
P01	01/07/2013	First Issue	PB	HC	JM	-
P02	20/08/2015	Label Updated	LW	LW	MH	-
P03	07/11/2016	Equipment Identification updated	PB	LW	MH	-

Notes:
- All dimensions are in millimeters unless otherwise specified

Crossrail Limited
25 Canada Square
Canary Wharf
London
E14 5LQ

© Crossrail

www.crossrail.co.uk

Scale : 1:1 @ A3

Contract : Crossrail Line 1 Programme
Originator : Crossrail Ltd
Location : Crossrail General
Title : Asset Management
Tag Label for Equipment - EQ
EQ - Equipment - 75x40mm

By : P.BORREGO
Chk : L.WILSON
App : M.HOPPER

Drg No : CRL1-XRL-G-DDA-CR001-00042
Rev : P03
Suit : S4
Auth : ---

RESTRICTED

Fit for authorisation

Copy Approved for Design - Created: 07-NOV-2016

Learning Legacy Document

Learning Legacy Document

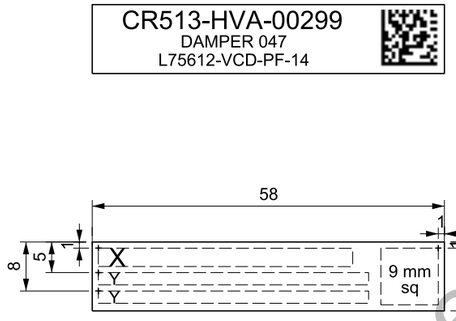

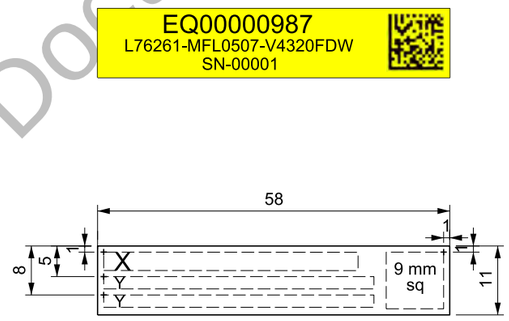

FONT SIZE:
- BOX X - 3MM
- BOX Y - 2MM

BAR CODE BOX:
- 9MM x 9MM

Rev.	Date	Description	By	Chkd	App	Auth
P01	27/08/2015	First Issue	LW	LW	LW	-
P02	07/11/2016	Asset Tag & Equip. ID updated	PB	LW	MH	-

Notes:

All dimensions are in millimeters unless otherwise specified

Crossrail Limited
25 Canada Square
Canary Wharf
London
E14 5LQ

© Crossrail

www.crossrail.co.uk

Scale : 1:1 @ A3

Contract : Crossrail Line 1 Programme
Originator : Crossrail Ltd
Location : Crossrail General
Title : Asset Management
Tag label details for Equipment - ER & CR
ER Equipment & CR-Tag

By : P.BORREGO
Chk : L.WILSON
App : M.HOPPER

Drg No : CRL1-XRL-G-DDA-CR001-00067 | Rev : P02 | Suit : S4 | Auth : ---

Fit for authorisation

RESTRICTED

Copy Approved for Design - Created: 07-NOV-2016

13.4 Label layouts with explanation of each data element

Please refer to the following drawings:

Generic Labels,	CRL1-XRL-G-DDK-CR001-00001.pdf
HV, LV and Earthwire Cable Label,	CRL1-XRL-G-DDK-CR001-00002.pdf
Data, Control & Fire Cable Label,	CRL1-XRL-G-DDK-CR001-00003.pdf

Learning Legacy Document

Document uncontrolled once printed. All controlled documents are saved on the CRL Document System.

© Crossrail Limited CRL UNCLASSIFIED

Generic Labelling

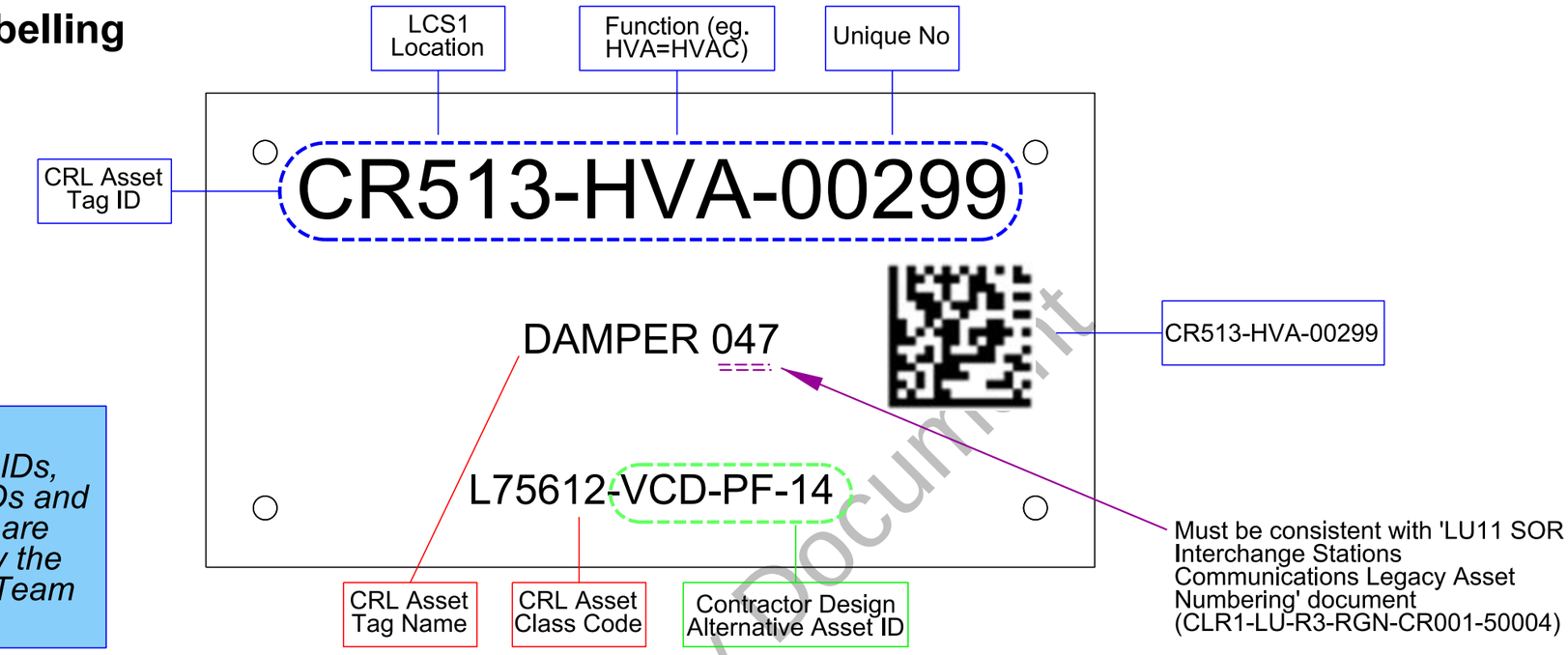

Asset Tag IDs, Equipment IDs and Serial IDs are provided by the CRL Asset Team

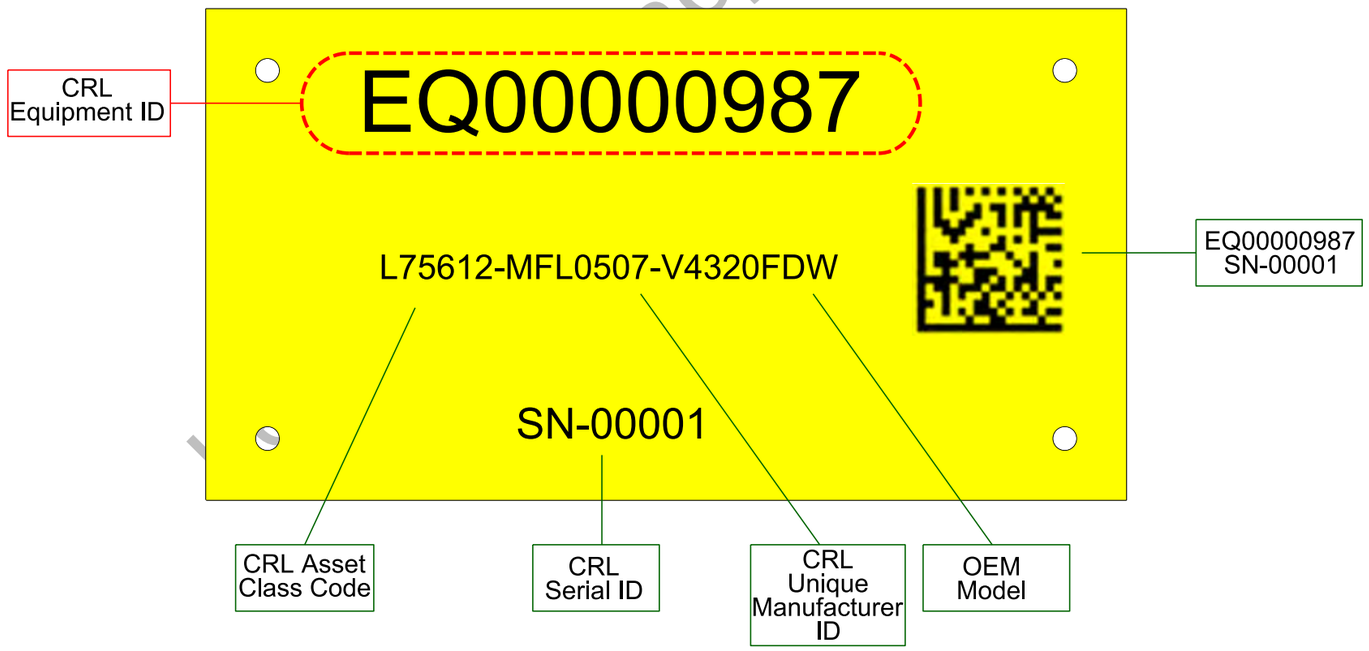

Rev.	Date	Description	By	Chkd	App	Auth
P01	20/08/2015	First Issue	LW	LW	MH	-
P02	15/11/2016	Asset Tag and Equipment ID Updated	PB	LW	MH	-
P03	18/11/2016	---	PB	LW	MH	-
P04	16/02/2017	Notes updated	PB	LW	MH	-

Notes:

- All dimensions are in millimeters unless otherwise specified

Crossrail Limited
25 Canada Square
Canary Wharf
London
E14 5LQ

© Crossrail

www.crossrail.co.uk

Scale : NTS @ A3

Contract : Crossrail Line 1 Programme
Originator : Crossrail Ltd
Location : Crossrail General
Title : Asset Management
Generic Labelling Information

By : P.BORREGO
Chk : L.WILSON
App : M.HOPPER

Drg No : CRL1-XRL-G-DDK-CR001-00001 | Rev : P04 | Suit : S4 | Auth :---

RESTRICTED

Fit for authorisation

Copy Approved for Design - Created: 16-FEB-2017

HV, LV & Earthwire Cables

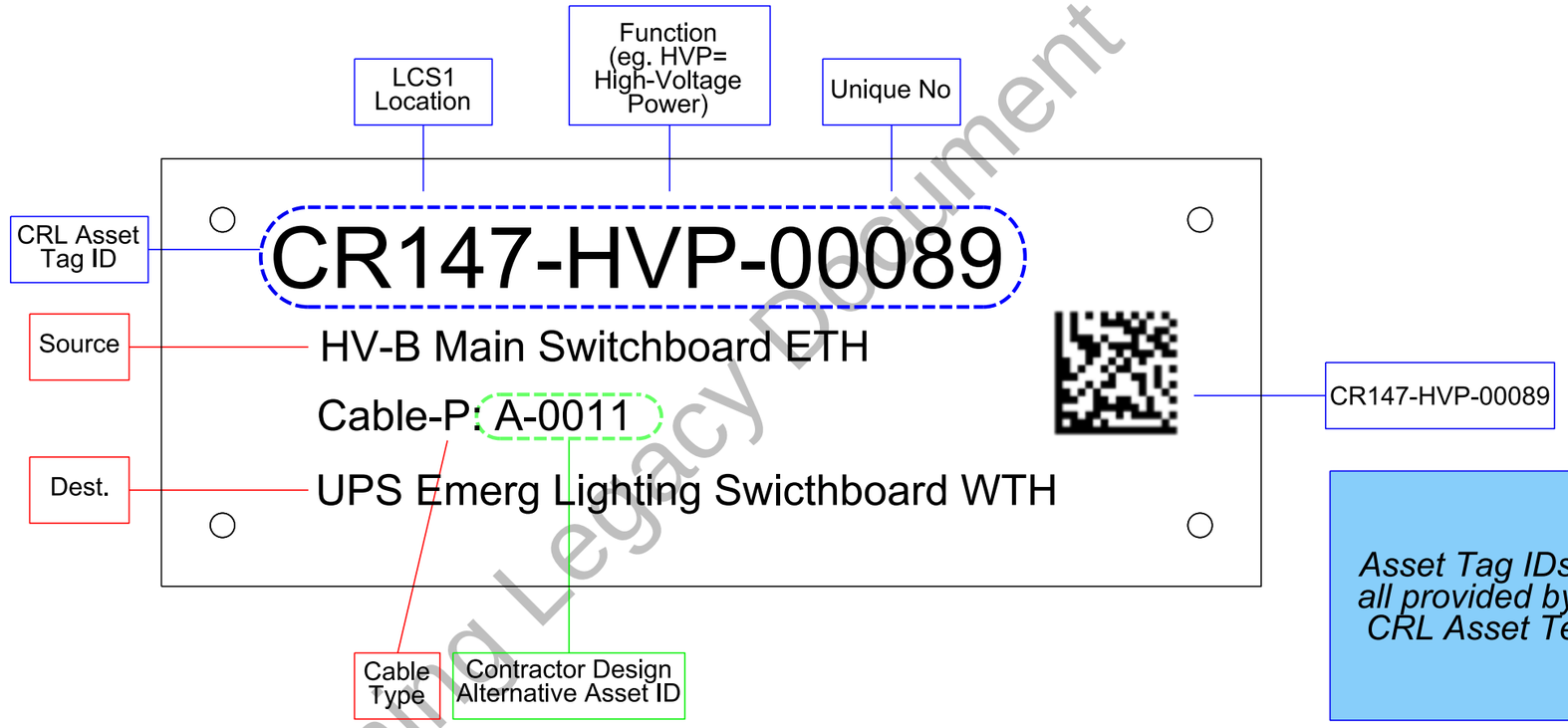

Asset Tag IDs are all provided by the CRL Asset Team

Learning Legacy Document

Copy Approved for Design - Created: 16-FEB-2017

Rev.	Date	Description	By	Chkd	App	Auth
P01	20/08/2015	First Issue	LW	LW	MH	-
P02	16/02/2017	Label updated	PB	LW	MH	-

Notes:
- All dimensions are in millimeters unless otherwise specified

Crossrail Limited
25 Canada Square
Canary Wharf
London
E14 5LQ
© Crossrail
www.crossrail.co.uk

Scale : NTS @ A3

Contract : Crossrail Line 1 Programme
Originator : Crossrail Ltd
Location : Crossrail General
Title : Asset Management
HV, LV & Earthwire Cables Labelling Information
By : P.BORREGO
Chk : L.WILSON
App : M.HOPPER
Drg No : CRL1-XRL-G-DDK-CR001-00002
Rev : P02
Suit : S4
Auth : ---

Fit for authorisation

RESTRICTED

Data, Control & Fire Cables

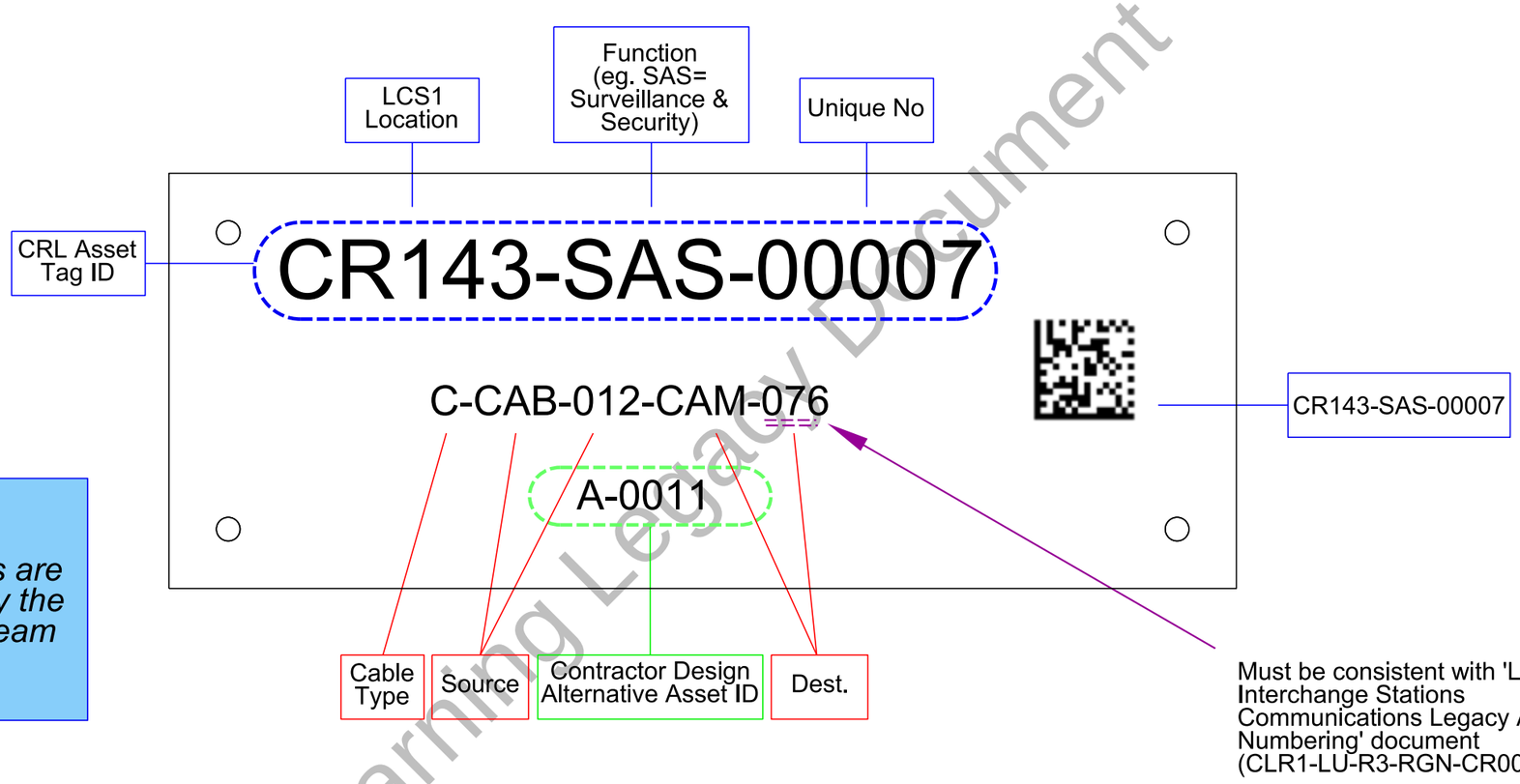

Asset Tag IDs are all provided by the CRL Asset Team

Learning Legacy Document

Copy Approved for Design - Created: 16-FEB-2017

Rev.	Date	Description	By	Chkd	App	Auth
P01	20/08/2015	First Issue	LW	LW	MH	-
P02	21/08/2015	---	LW	LW	LW	-
P03	16/02/2017	Notes updated	PB	LW	MH	-

Notes:
- All dimensions are in millimeters unless otherwise specified

Crossrail Limited
25 Canada Square
Canary Wharf
London
E14 5LQ
www.crossrail.co.uk
© Crossrail

Scale : NTS @ A3

Contract : Crossrail Line 1 Programme
Originator : Crossrail Ltd
Location : Crossrail General
Title : Asset Management Data, Control & Fire Cable Labelling Information
By : P.BORREGO
Chk : L.WILSON
App : M.HOPPER
Drg No : CRL1-XRL-G-DDK-CR001-00003
Rev : P03
Suit : S4
Auth : ---

Fit for authorisation

RESTRICTED

13.5 Label Adhesive Compliance Matrix

Please use the following generic spreadsheet for provided compliance information.

CRL1-XRL-Z3-XDS-CR001-50005

Learning Legacy Document

Document uncontrolled once printed. All controlled documents are saved on the CRL Document System.
© Crossrail Limited CRL UNCLASSIFIED

Req ID	Adhesive Requirement
AR1	Mechanical fixing should be the first consideration for attaching labels, only if mechanical fixing is not feasible could adhesive fixing be considered
AR2	Before fixing any labels by adhesive, clear and written approval should be sought from the relevant PFE based upon the following requirements: (AR3-AR13)
AR3	Adhesive should be permanent structural adhesive. Pressure sensitive adhesives are not suitable
AR4	Adhesive must be suitable for use in wet/damp and dusty environments
AR5	Adhesive materials must comply with relevant fire safety standards
AR6	Contractors must provide a Method Statement detailing the application of the adhesive in a safe manner and without creating health risks e.g. due to solvent vapours
AR7	The adhesive must be suitable for fixing identification labels to the relevant substrates (underlying surface/asset)
AR8	The adhesive should have a suitable working time to allow label positions to be adjusted, if necessary, before setting
AR9	Adhesive must have shear strength of at least 10 N/mm2 and a peel strength of at least 3 N/mm2 and be suitable for a temperature range of -20C to 80C
AR10	Contractors must demonstrate successful pass of both adhesion (pull) strength and shear strength for all different substrates that are applicable
AR11	Adhesives should only be applied on clean, dry, dust and grease free surfaces. Additionally, the surface should not flake or decompose, thereby compromising adhesion
AR12	You are to ensure that the materials upon which the label is to be applied are compatible with the adhesive and application will not result in degradation of the equipment or the adhered bond over time.
AR13	In the absence of life expectancy data for the label, adhesive, or printed legend being provided, you are to confirm to me that the label is ‘fit for purpose’ and has a serviceable life which is at least as long as the Equipment to which it is attached.

Learning Legacy Document