ASSET DATA DICTIONARY DEFINITION DOCUMENT (AD4)
L215612 – SLOT INTERFACE

Learning Legacy Document

Document Number: **CRL1-XRL-Z3-ADDSD-CR001-50418**

Document Revision: **3.0**

Document History:

Revision:	Date:	Prepared by:	Checked by:	Authorised by:	Reason for Issue:
1.0	07/05/14	[redacted]	[redacted]	[redacted]	First issue
2.0	19-Sep-2014	[redacted]	[redacted]	[redacted]	Description change Approvals Added Consultations Removed
3.0	27-Aug-2015	[redacted]	[redacted]	[redacted]	Labelling Section Updated

This document contains proprietary information. No part of this document may be reproduced without prior written consent from the chief executive of Crossrail Ltd.

Document uncontrolled once printed. All controlled documents are saved on the CRL Document System

© Crossrail Limited **RESTRICTED**

Learning Legacy Document

Document uncontrolled once printed. All controlled documents are saved on the CRL Document System
© Crossrail Limited RESTRICTED

Contents

1 Introduction 4
1.1 Asset Details 4
1.2 Description 4
1.3 Related Functions 4
2 Asset Tag Identification Rules 4
2.1 Example Images 5
3 Attributes 6
3.1 Generic Attributes 6
3.2 Class Specific Attributes 6
4 Performance Data 7
5 Labelling 7
6 Other Information 7
7 Reference Material 7
8 Crossrail Technical Approvals 8

Learning Legacy Document

Document uncontrolled once printed. All controlled documents are saved on the CRL Document System
© Crossrail Limited RESTRICTED

1 Introduction

Not Applicable

1.1 Asset Details

Class Code:	L215612
Class Name:	Slot Interface
Class Lineage:	Construction Products>Civil Engineering Works Products>Transport Control and Monitoring Products>Signalling Products>Automatic Train Control>Axle Counter System>Slot Interface

1.2 Description

Slot interfaces are located at the rear of cabinets and provide both a space and a connection point, via a pin coded base connector, for COM Boards to be located within the Cabinet. The slot interface is attached by screws to the back of the Cabinet and also provides an onward connection through cabling to equipment that is remote from the Cabinet, but it is controlled by the elements within the Cabinet.

1.3 Related Functions

All information on the configuration of asset classes (L-Class) to functions is contained within the latest revision of the Asset Data Dictionary Master Configuration document (eB ref: CRL1-XRL-Z3-ADDSD-CR001-50186)

2 Asset Tag Identification Rules

Assets will be identified as required by the Asset Identification Standard (CRL1-XRL-O6-STD-CR001-00031), in the following format:

<LCS Code>-<Function Code>-<Incremental number to ensure uniqueness>

e.g. C125-ATC-12345

Information and guidance on the standard naming convention for all asset classes is contained within the latest revision of the Asset Naming Convention Document (eB ref: CRL1-XR1-Z3-ADDSD-CR001-50413).

Learning Legacy Document

Document uncontrolled once printed. All controlled documents are saved on the CRL Document System

© Crossrail Limited RESTRICTED

2.1 Example Images

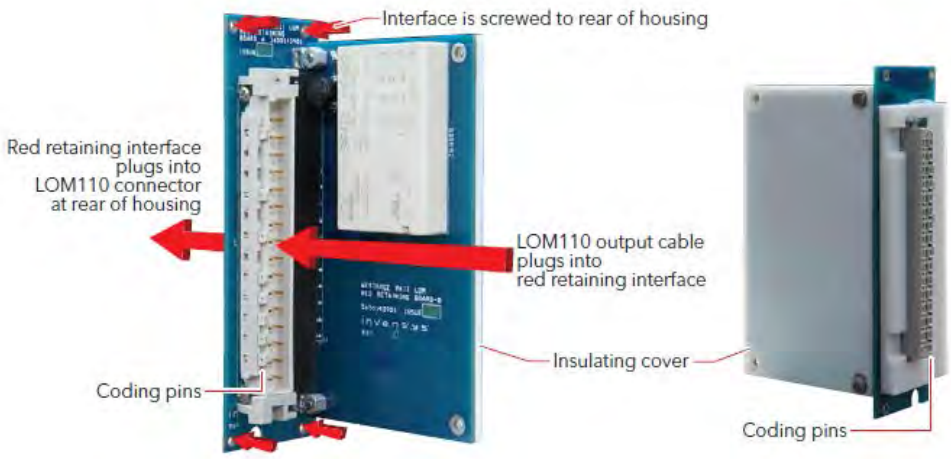

Learning Legacy Document

Document uncontrolled once printed. All controlled documents are saved on the CRL Document System
© Crossrail Limited RESTRICTED

3 Attributes

3.1 Generic Attributes

All Classes of assets will have a set of Generic Attributes for which data is collected without exception. Full details relating to these assets can be found at:

AD4 – Generic Attributes CRL1-XRL-Z3-ADDSD-CR001-50069

3.2 Class Specific Attributes

Below is a table of the further specific attributes which are associated with this asset class.

Attribute Name	Base Unit or Formula	Value Type (See Below)	Decimal Places (nu Only)	Defined Values List (pd only)	Description
Slot Number (#)	#	NU	0		The number of the slot the interface allows the board to connect to. Numbering sequence to be from left to right as you face the Cabinet.
Cabling Requirements		CH			Reference to the cabling required to connect the Slot Interface and Cabinet to the controlled remote equipment.
System Use		CH			Primary use of system e.g. Axle counter evaluator, communication servers, object controllers, etc.
Length (Millimetres)	Millimetres	NU	0		Inner dimensions of the slot that would house a COM Board within the Cabinet.
Width (Millimetres)	Millimetres	NU	0		Inner dimensions of the slot that would house a COM Board within the Cabinet.
Height (Millimetres)	Millimetres	NU	0		Inner dimensions of the slot that would house a COM Board within the Cabinet.

pd = Predefined List (Listed Values Only)
nu = Numeric (dp and number format can be stipulated)
ch = Free text (Max 255 Characters)
da = Date (dd-mm-yyyy)
me = Memo (Free text 1GB Limit)

Learning Legacy Document

Document uncontrolled once printed. All controlled documents are saved on the CRL Document System

© Crossrail Limited RESTRICTED

4 Performance Data

This section is to be used to specify the performance data to be gathered from this Class of asset when in operation. To be populated once the performance measures have been agreed with the Infrastructure Managers.

5 Labelling

Information and guidance on the standard labelling convention for all asset classes is contained within the latest revision of the Asset Naming and Labelling Convention Document (eB ref: CRL1-XR1-Z3-ADDSD-CR001-50413).

6 Other Information

Not Applicable

7 Reference Material

- Asset Data Dictionary Master Configuration document - CRL1-XRL-Z3-ADDSD-CR001-50186
- Asset Identification Standard - CRL1-XRL-O6-STD-CR001-00031
- AD4 – Generic Attributes - CRL1-XRL-Z3-ADDSD-CR001-50069
- <ADD OTHER REFERENCE DOCUMENTS HERE>

Learning Legacy Document

Document uncontrolled once printed. All controlled documents are saved on the CRL Document System

© Crossrail Limited RESTRICTED

8 Crossrail Technical Approvals

Name	Role	Date
[redacted]	Signalling Manager	19-Sep-2014

Learning Legacy Document

Document uncontrolled once printed. All controlled documents are saved on the CRL Document System
© Crossrail Limited RESTRICTED