ASSET DATA DICTIONARY DEFINITION DOCUMENT (AD4)
L71675 - RISER PIPE WORK

Learning Legacy Document

Document Number: **CRL1-XRL-Z3-ADDSD-CR001-50089**

Document Revision: **7.0**

Document History:

Revision:	Date:	Prepared by:	Checked by:	Authorised by:	Reason for Issue:
1.0	09-Nov-2012	[redacted]	[redacted]	[redacted]	First Issue
2.0	23-Apr-2013	[redacted]	[redacted]	[redacted]	Content revised
3.0	03-Jun-2014	[redacted]	[redacted]	[redacted]	Attribute Name Corrected Attribute DP Corrected Asset Tag Identification Section Updated
4.0	19-Sep-2014	[redacted]	[redacted]	[redacted]	Approvals Added Consultations Removed
5.0	10-Feb-2015	Kemi Olawale	[redacted]	[redacted]	Attribute Updated
6.0	27-Aug-2015	[redacted]	[redacted]	[redacted]	Labelling Section Updated
7.0	15-Dec-2015	[redacted]	[redacted]	[redacted]	Asset Identification Rules Updated

This document contains proprietary information. No part of this document may be reproduced without prior written consent from the chief executive of Crossrail Ltd.

Document uncontrolled once printed. All controlled documents are saved on the CRL Document System

© Crossrail Limited **RESTRICTED**

Contents

1 Introduction 3
1.1 Asset Details 3
1.2 Description 3
1.3 Related Functions 3
2 Asset Tag Identification Rules 3
2.1 Example Images 5
3 Attributes 6
3.1 Generic Attributes 6
3.2 Class Specific Attributes 6
4 Performance Data 7
5 Labelling 7
6 Other Information 7
7 Reference Material 7
8 Crossrail Technical Approvals 8

Learning Legacy Document

Document uncontrolled once printed. All controlled documents are saved on the CRL Document System
© Crossrail Limited RESTRICTED

1 Introduction

1.1 Asset Details

Class Code:	L71675
Class Name:	Riser Pipe Work
Class Lineage:	Construction Products>Services>Supply/storage/distribution of liquids and gases>Fixed fire suppression systems>Fire suppression components>Riser pipe work

1.2 Description

Riser pipe work is the system of vertical pipes connected between different floors of a building for a fireman's hose to be attached.

1.3 Related Functions

All information on the configuration of asset classes (L-Class) to functions is contained within the latest revision of the Asset Data Dictionary Master Configuration document (eB ref: CRL1-XRL-Z3-ADDSD-CR001-50186)

2 Asset Tag Identification Rules

Assets will be identified as required by the Asset Identification Standard (CRL1-XRL-O6-STD-CR001-00031) in the following format:

<LCS Code>-<Function Code>-<Incremental number to ensure uniqueness>

e.g. CR076-BAF-12345

Information and guidance on the standard naming convention for all asset classes is contained within the latest revision of the Asset Naming Convention Document (eB ref: CRL1-XR1-Z3-ADDSD-CR001-50413).

Learning Legacy Document

Document uncontrolled once printed. All controlled documents are saved on the CRL Document System

© Crossrail Limited RESTRICTED

A new tag for a riser pipe work is only required under the following circumstance:

- Change in diameter
- Change in material
- Pipework intrudes another asset (e.g. valve, valve pit etc.)

Note: A new tag is NOT required when a pipe of a similar diameter splits (e.g. to feed various outlets).

Using the above guidance the following diagram has been developed for the Fire Protection Services at Custom House Station (C520-LAO-P-DDE-CR145_Z-78300) provided by the contractor.

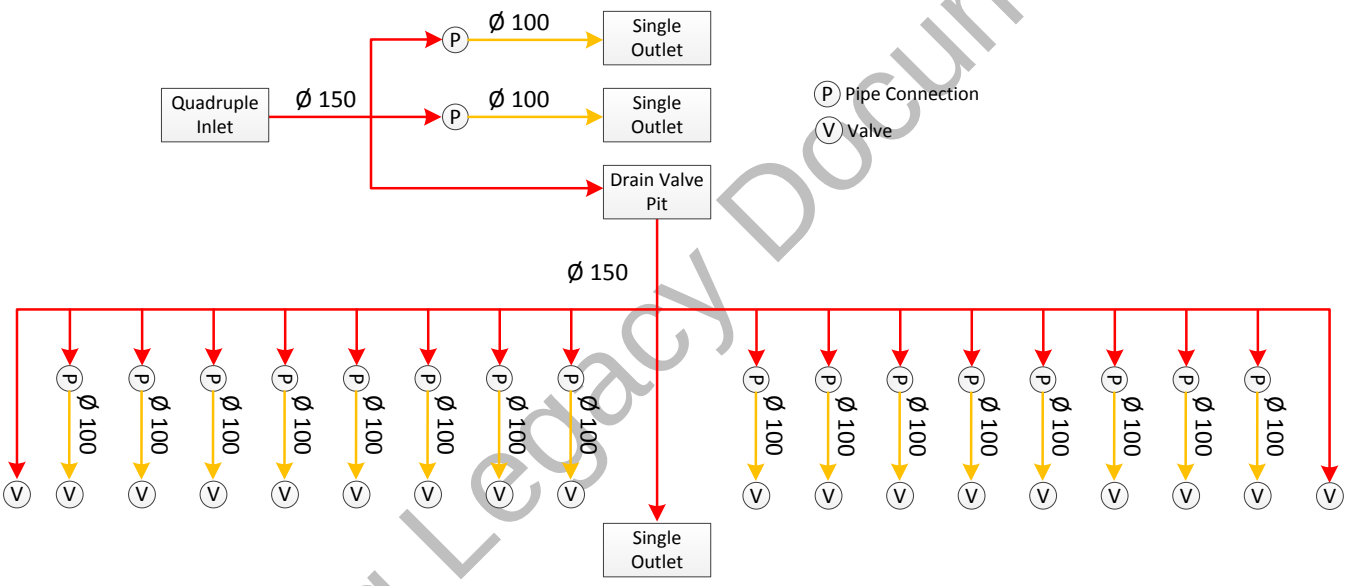

From the above 20 riser pipe assets have been identified.

Learning Legacy Document

Document uncontrolled once printed. All controlled documents are saved on the CRL Document System

© Crossrail Limited RESTRICTED

2.1 Example Images

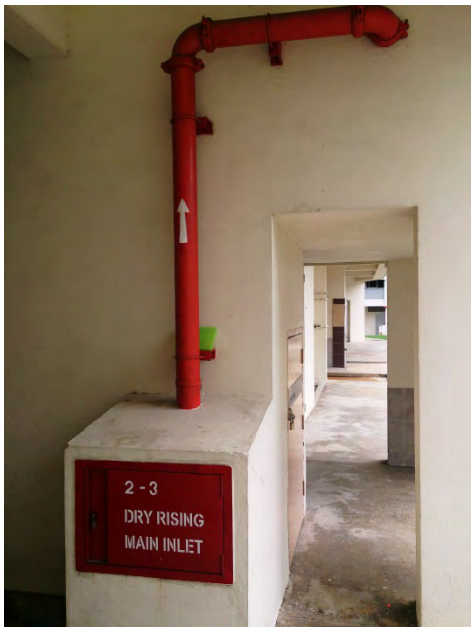

Learning Legacy Document

Document uncontrolled once printed. All controlled documents are saved on the CRL Document System
© Crossrail Limited RESTRICTED

3 Attributes

3.1 Generic Attributes

All Classes of assets will have a set of Generic Attributes for which data is collected without exception. Full details relating to these assets can be found at:

AD4 – Generic Attributes CRL1-XRL-Z3-ADDSD-CR001-50069

3.2 Class Specific Attributes

Below is a table of the further specific attributes which are associated with this asset class.

Attribute Name	Base Unit or Formula	Value Type (See Below)	Decimal Places (nu Only)	Defined Values List (pd only)	Description
External diameter (Millimetres)	Millimetres	NU	0		The external diameter of the pipe
Insulated		PD		Yes No	Is the asset insulated?
Internal diameter (Millimetres)	Millimetres	NU	0		The internal diameter of the pipe
Operational Pressure (kPa)	kPa	NU	2		The maximum designed Pressure in kPa
Riser Pipe Material		PD		Steel Copper Ceramic Polypropylene	The construction material of the pipe
Volume Flow (Litres/Sec)	Litres/Sec	NU	2		The maximum designed flow rate in litres per second

pd = Predefined List (Listed Values Only)
nu = Numeric (dp and number format can be stipulated)
ch = Free text (Max 255 Characters)
da = Date (dd-mm-yyyy)
me = Memo (Free text 1GB Limit)

Document uncontrolled once printed. All controlled documents are saved on the CRL Document System

© Crossrail Limited RESTRICTED

Learning Legacy Document

4 Performance Data

This section is to be used to specify the performance data to be gathered from this Class of asset when in operation. To be populated once the performance measures have been agreed with the Infrastructure Managers.

5 Labelling

Information and guidance on the standard labelling convention for all asset classes is contained within the latest revision of the Asset Naming and Labelling Convention Document (eB ref: CRL1-XR1-Z3-ADDSD-CR001-50413).

6 Other Information

Not Applicable

7 Reference Material

- Asset Data Dictionary Master Configuration document - CRL1-XRL-Z3-ADDSD-CR001-50186
- Asset Identification Standard - CRL1-XRL-O6-STD-CR001-00031
- AD4 – Generic Attributes - CRL1-XRL-Z3-ADDSD-CR001-50069
- Asset Naming Convention Document - CRL1-XR1-Z3-ADDSD-CR001-50413

Learning Legacy Document

Document uncontrolled once printed. All controlled documents are saved on the CRL Document System

© Crossrail Limited RESTRICTED

8 Crossrail Technical Approvals

Name	Role	Date
[redacted]	Lead Mechanical & Electrical Plant (MEP) Engineer	19-Sep-2014

Learning Legacy Document

Document uncontrolled once printed. All controlled documents are saved on the CRL Document System
© Crossrail Limited RESTRICTED