ASSET DATA DICTIONARY DEFINITION DOCUMENT (AD4) L746154 - MOTORISED OHLE SECTION SWITCH

Learning Legacy Document

Document Number: **CRL1-XRL-Z3-ADDSD-CR001-50301**

Document Revision: **10.0**

Document History:

Revision:	Date:	Prepared by:	Checked by:	Authorised by:	Reason for Issue:
1.0	22-Jan-2014	Loukia Sivena	[redacted]	[redacted]	First Issue
2.0	03-Jun-2014	[redacted]	[redacted]	[redacted]	Corrected Attribute Name Asset Tag Identification Section Updated
3.0	26-Jun-2014	[redacted]	[redacted]	[redacted]	
4.0	19-Sep-2014	[redacted]	[redacted]	[redacted]	Attribute Amendments Description Change Images added Approvals Added Consultations Removed
5.0	17-Dec-2014	Kemi Olawale	[redacted]	[redacted]	Attribute Deleted Class Name Amended Asset Description Updated
6.0	27-Aug-2015	[redacted]	[redacted]	[redacted]	Labelling Section Updated
7.0	11-May-2016	[redacted]	[redacted]	[redacted]	Attribute added

Document uncontrolled once printed. All controlled documents are saved on the CRL Document System

© Crossrail Limited RESTRICTED

Revision:	Date:	Prepared by:	Checked by:	Authorised by:	Reason for Issue:
8.0	30-Aug-2016	[redacted]	[redacted]	[redacted]	Attribute Added
9.0	20-Apr-2017	[redacted]	[redacted]	[redacted]	Attribute Replaced
10.0	25-Apr-2017	[redacted]	[redacted]	[redacted]	LRS Codes Updated

This document contains proprietary information. No part of this document may be reproduced without prior written consent from the chief executive of Crossrail Ltd.

Learning Legacy Document

Contents

1 Introduction 3
1.1 Asset Details 3
1.2 Description 3
1.3 Related Functions 3
2 Asset Tag Identification Rules 4
2.1 Example Images 5
3 Attributes 6
3.1 Generic Attributes 6
3.2 Class Specific Attributes 6
4 Performance Data 8
5 Labelling 8
6 Other Information 8
7 Reference Material 8
8 Crossrail Technical Approvals 9

Document uncontrolled once printed. All controlled documents are saved on the CRL Document System

© Crossrail Limited RESTRICTED

1 Introduction

1.1 Asset Details

Class Code: L746154

Class Name: Motorised OHLE Section Switch

Class Lineage: Construction Products>Services>Electric power and light services products>Distribution devices>Power supply control devices>Isolators>Motorized OHLE section switch

1.2 Description

Motorised section switches are self-contained units used for switching of overhead lines on electrical distribution systems. A motor activates the switch, it to be operated remotely from the RCC.

1.3 Related Functions

All information on the configuration of asset classes (L-Class) to functions is contained within the latest revision of the Asset Data Dictionary Master Configuration document (eB ref: CRL1-XRL-Z3-ADDSD-CR001-50186).

Learning Legacy Document

Document uncontrolled once printed. All controlled documents are saved on the CRL Document System

© Crossrail Limited RESTRICTED

2 Asset Tag Identification Rules

Assets will be identified as required by the Asset Identification Standard (CRL1-XRL-O6-STD-CR001-00031) in the following format:

<LCS Code>-<Function Code>-<Incremental number to ensure uniqueness>

e.g. CR076-BAF-12345

Information and guidance on the standard naming convention for all asset classes is contained within the latest revision of the Asset Naming Convention Document (eB ref: CRL1-XR1-Z3-ADDSD-CR001-50413).

Learning Legacy Document

Document uncontrolled once printed. All controlled documents are saved on the CRL Document System

© Crossrail Limited RESTRICTED

2.1 Example Images

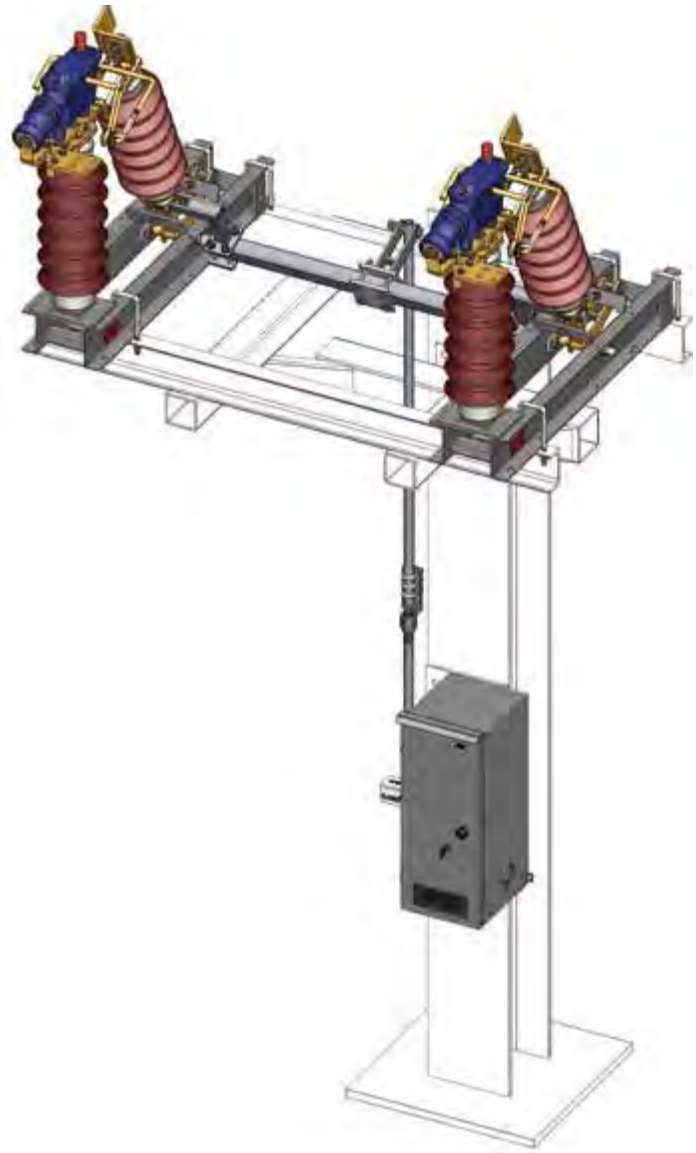

Lea

Document uncontrolled once printed. All controlled documents are saved on the CRL Document System
© Crossrail Limited RESTRICTED

3 Attributes

3.1 Generic Attributes

All Classes of assets will have a set of Generic Attributes for which data is collected without exception. Full details relating to these assets can be found at:

AD4 – Generic Attributes CRL1-XRL-Z3-ADDSD-CR001-50069

3.2 Class Specific Attributes

Below is a table of the further specific attributes which are associated with this asset class.

Attribute Name	**Base Unit or Formula**	**Value Type** (See Below)	**Decimal Places** (nu Only)	**Defined Values List** (pd only)	**Description**
Weight (Kilograms)	Kilograms	NU	2		Weight of switch
Full load current (Amps)	Amps	NU	0		The full load current of the switch
Voltage (Volts)	Volts	NU	0		The maximum voltage of the switch
Meterage (Metres)	Metres	NU	0		Meterage (Chainage) location of asset. To be populated only when the asset is located on track.

Learning Legacy Document

Document uncontrolled once printed. All controlled documents are saved on the CRL Document System

© Crossrail Limited RESTRICTED

Attribute Name	Base Unit or Formula	Value Type (See Below)	Decimal Places (nu Only)	Defined Values List (pd only)	Description
LRS Code		PD		C.EB C.EB.CRW5 C.EB.CR1 C.EB.CR7 C.EB.TBC C.WB C.WB.CRW9 C.WB.CRW6 C.WB.CR2 C.WB.CR5 C.WB.TBA C.WB.TBB CNE.EB CNE.WB CSE.EB CSE.EB.CR11 CSE.WB CSE.EB.CR13 CSE.WB.CR15 Non Track	The Crossrail Linear Referencing Standard code (CRL1-XRL-O6-STD-CR001-00026) where the asset is located. When the asset is not located on track then non track should be selected. The LRS codes are as follows: C.EB - Central Section Eastbound C.EB.CRW5 - Crossover between W5 and W4 Points C.EB.CR1 - Crossover between C1 and C4 Points C.EB.CR7 - Crossover between C7 and C8 Points C.EB.TBC - Turnback C C.WB - Central Section Westbound C.WB.CRW9 - Crossover between W9 and W8 Points C.WB.CRW6 - Crossover between W6 and W3 Points C.WB.CR2 - Crossover between C2 and C3 Points C.WB.CR5 - Crossover between C5 and C6 Points C.WB.TBA - Turnback A C.WB.TBB - Turnback B CNE.EB - Central Section North East Spur Eastbound CNE.WB - Central Section North East Spur Westbound CSE.EB - Central Section South East Spur Eastbound CSE.EB.CR11 - Crossover between C11 and C12 Points CSE.WB - Central Section South East Spur Westbound CSE.EB.CR13 - Crossover between C13 and C14 Points CSE.WB.CR15 - Crossover between C15 and C16 Points Non Track - Non Track Assets

pd = Predefined List (Listed Values Only)
nu = Numeric (dp and number format can be stipulated)
ch = Free text (Max 255 Characters)
da = Date (dd-mm-yyyy)
me = Memo (Free text 1GB Limit)

Learning Legacy Document

Document uncontrolled once printed. All controlled documents are saved on the CRL Document System

© Crossrail Limited RESTRICTED

4 Performance Data

This section is to be used to specify the performance data to be gathered from this Class of asset when in operation. To be populated once the performance measures have been agreed with the Infrastructure Managers.

5 Labelling

Information and guidance on the standard labelling convention for all asset classes is contained within the latest revision of the Asset Naming and Labelling Convention Document (eB ref: CRL1-XR1-Z3-ADDSD-CR001-50413).

6 Other Information

Not Applicable

7 Reference Material

- Asset Data Dictionary Master Configuration document - CRL1-XRL-Z3-ADDSD-CR001-50186
- Asset Identification Standard - CRL1-XRL-O6-STD-CR001-00031
- AD4 – Generic Attributes - CRL1-XRL-Z3-ADDSD-CR001-50069
- Asset Naming Convention Document - CRL1-XR1-Z3-ADDSD-CR001-50413

Learning Legacy Document

Document uncontrolled once printed. All controlled documents are saved on the CRL Document System

© Crossrail Limited RESTRICTED

8 Crossrail Technical Approvals

Name	Role	Date
[redacted]	Traction Power	19-Sep-2014

Learning Legacy Document

Document uncontrolled once printed. All controlled documents are saved on the CRL Document System
© Crossrail Limited RESTRICTED