Learning Legacy Document

Public Facing Labelling Guidance

Document Number: CRL1-XRL-Z3-GUI-CR001-50071

Asset Tag Label Guidance 2.0

Document History:

Revision:	Date:	Prepared by:	Checked by:	Approved by:	Reason for issue:
1.0	29/06/2017	Marta Blanco	[redacted]	George Stowell	For Information
2.0	04/08/2017	Marta Blanco	[redacted]	George Stowell	Clarification on label size, colour and location

This document contains proprietary information. No Part of this document may be reproduced without prior written consent from the chief executive of Crossrail Ltd.

© Crossrail Limited

Learning Legacy Document

CROSSRAIL REVIEW AND ACCEPTANCE STATUS This decal is to be used for submitted documents requiring acceptance by CRL.		
	Code 1.	Accepted. Work May Proceed
	Code 2.	Not Accepted. Revise and resubmit. Work may proceed subject to incorporation of changes indicated
	Code 3.	Not Accepted. Revise and resubmit. Work may not proceed
	Code 4.	Received for information only. Receipt is confirmed
Reviewed/Accepted by:(signature)		
Print Name:		Date:
Acceptance by CRL does not relieve the designer/supplier from full compliance with their contractual obligations and does not constitute CRL approval of design, details, calculations, analyses, test methods or materials developed or selected by the designer/supplier.		

 © Crossrail Limited

Contents

Definitions: 1

Introduction: 2
- Purpose of Report: 2.1
- Scope of Report: 2.2

General Principles: 3

Component Labelling: 4

Cabinets: 4.1
- Equipment Cabinet: 4.1.1
- Fire Extinguisher: 4.1.2
- Fire Hydrant: 4.1.3
- Cabinets around PHPs: 4.1.4

Benches: 4.2
- Bench / Lean Bar: 4.2.1

Service Boom: 4.3
- Cross Passage Light: 4.3.1
- Service Boom Speakers: 4.3.2
- Service Boom CCTV Cameras: 4.3.3

Totems: 4.4
- Totem Mounted Luminaire: 4.4.1
- Totem Speaker: 4.4.2

Platform Edge Screens (PES): 4.5
- PES Speakers: 4.5.1
- Platform Lightbox: 4.5.2

Platform Screen Doors (PSD): 4.6

CCTV Cameras: 4.7

Fixed Luminaires for General Lighting: 4.8
- Accent Light: 4.8.1
- Signage Panel Integrated Luminaire: 4.8.2

Switchable Signage: 4.9

Non-switchable Signage: 4.10
- Non-Illuminated Sign: 4.10.1
- Illuminated Sign: 4.10.2
- Curved Platform Wall Mounted Sign Panel: 4.10.3
- Trackside Roundel: 4.10.4
- Typical Integrated Bench + Roundel: 4.10.5

Hatches / Manhole: 4.11

Station Clock: 4.12

Doors: 4.13
- Barrier Gate: 4.13.1

References: 5

Learning Legacy Document

1.0 Definitions

CIS	Customer Information Systems
CRL	Crossrail
LU	London Underground
PES	Platform Edge Screen
PSD	Platform Screen Door
PFU	Primary Functional Unit
FU	Functional Unit
PHP	Public Help Point
CE	Certificate
RHS	Rolled Hollow Section
CAM	Cameras
LSK	Loudspeakers
SWS	Switchable Signage
NSS	Non Switchable Signage
TTM	Totem
CAP	Help Point Frame
GLA	Gate Line Attendance Point

Learning Legacy Document

 © Crossrail Limited

2.0 Introduction

2.1 Purpose of Guidance Document

The purpose of this document is to describe the location and design requirements for the placement of asset tag labels for the architectural components within the public areas of the Crossrail central stations.

This document aims to locate the asset tag labels in practical and visually appropriate locations. It does not describe the information provided on the label.

Note: This document should be read in conjunction with the following documents:

- *The Asset Tag and Equipment Label Guidance (Document No: CRL1-XRL-Z3-GUI-CR001-50040)*
- *The Asset Identification Standard (Document No: CRL1-XRL-O6-STD-CR001-00031.*
- *The Asset Naming and Labelling Convention Document (Document No: CRL1-XRL-Z3-ADDSD-CR001-50413)*
- *ADD Master Configuration Baseline (Document No: CRL1-XRL-Z3-ADDSD-CR001-50186)*

2.2 Scope

The document itemises the generic Assets in the public areas of the Crossrail Central London Stations and sets out guidance for the colour, material, size and location of asset tag labels. All other label information is included in the suite of documents noted in section 2.1.

Assets that have been modified by the individual station design teams and contractors are not covered in this document. For these components, the label placement guidance given in this document shall be applied where possible.

Any Assets not described in this document shall be labelled in a similar manner to that outlined in this document.

On all Assets, equipment labels shall be hidden from public view and placed inside equipment housing or behind the equipment's enclosure, next to the Manufacturer's label where possible or else in a consistent position, on single asset types at each station and across stations.

SID Labelling requirements are not covered in this document.

Learning Legacy Document

3.0 General Principles

This section is a summary of the principles set out in the following documents:

- *Asset Tag and Equipment Label Guidance* (Document No: *CRL1-XRL-Z3-GUI-CR001-50040)*
- *Asset Identification Standard* (Document No: *CRL1-XRL-O6-STD-CR001-00031*)

It highlights key aspects of asset and equipment labelling of components found in the Crossrail project.

COLOUR & MATERIAL

The following label colours shall be used:

- *Primary Functional Units, Functional Units and Asset Tags - Black text on white / metallic background.*
- *Equipment - black text on a yellow background*

Where specified, stainless steel labels laser engraved utilising black text can be used. Typically, such labels will be used in public facing areas on assets with metallic finishes, a less expensive and encouraged option is metallic coloured rigid multi-layer acrylic sheets, laser engraved to form the characters on each label.

Where a Crossrail Asset Identification Label is required, possible materials that can be used (which must be compliant with London Underground Limited Standard 1-085 "Fire safety performance of materials") for labels include:

- *Flexible labels made from zero halogen, low toxicity, radiation cross linked UV stabilised polyolefin sheet.*
- *Rigid multi-layer acrylic sheets, laser engraved to form the characters on each label.*
- *Stainless steel labels, laser engraved in black to form the characters on each label (bear in mind this is not a low cost option so should be utilised sparingly) a less expensive and encouraged option is metallic coloured rigid multi-layer acrylic sheets, laser engraved to form the characters on each label.*
- *A combination of the above flexible labels and aluminium or similar type rigid backing materials may be used (as long as the whole life of the combined composite products will not naturally deteriorate and the combined cost is not inordinate).*

Figure 1 – Extract from CR-XRL-06-STD-CR001-00031 - Asset Identification Standard

LABEL POSITIONING

Generic guide to label positioning is as follows:

For label positioning and installation arrangements a separate 'Label Positioning and Installation Document' is recommended. This would typically include images of the assets in question, the position of each label, the appropriate size for each label, any relevant materials and tools to support fixing and where appropriate the authorised adhesive type being used for a particular label type. It is also sensible to include a label installation schedule.

Definition of a Public Facing Area:
An area the general public can be expected to access during normal non-emergency circumstances.

Public Facing Area and External Envelope Considerations:
Labels in public facing areas or an external envelope of an element of infrastructure shall be out of public sight except where the absence of a clearly visible label will compromise safety.

- *Labels shall be located by competent designers so that the architecture of public facing areas and external envelopes is not adversely affected.*
- *Labels shall be located unobtrusively and coordinated with adjacent signage where practical.*
- *Labels shall be the smallest practicable size that can be clearly read without visual aids, by maintenance personnel standing at the normal point of access.*
- *If it is not practical for a label to be out of public sight the Contractor shall consult the CRL Asset Information Team who will seek advice from a relevant Architect for a derogation before labels are applied.*
- *Asset Tag Labels (white/metallic) should be placed adjacent to the asset or close to it e.g. on the asset fixing bracket.*
- *Serialised Equipment Labels (yellow) shall be placed on the equipment.*

Figure 2 – Extract from CR-XRL-STD-CR001-00031 - Asset Identification Standard

Learning Legacy Document

 © Crossrail Limited

SIZES & LEGIBILITY

Label sizes shall be one of the standard size labels specified in Section 13 (when practical) with the actual selection of size being decided as follows:

- *For passenger facing areas (also check section 10.2), the size of label used shall be the smallest practicable size that can be easily read without visual aids, by a person standing at the normal point of access based on the standard label sizes listed in Section 13.*

Figure 3 - Extract from CR-XRL-06-STD-CR001-00031 - Asset Identification Standard

ASSET TAG LABELS

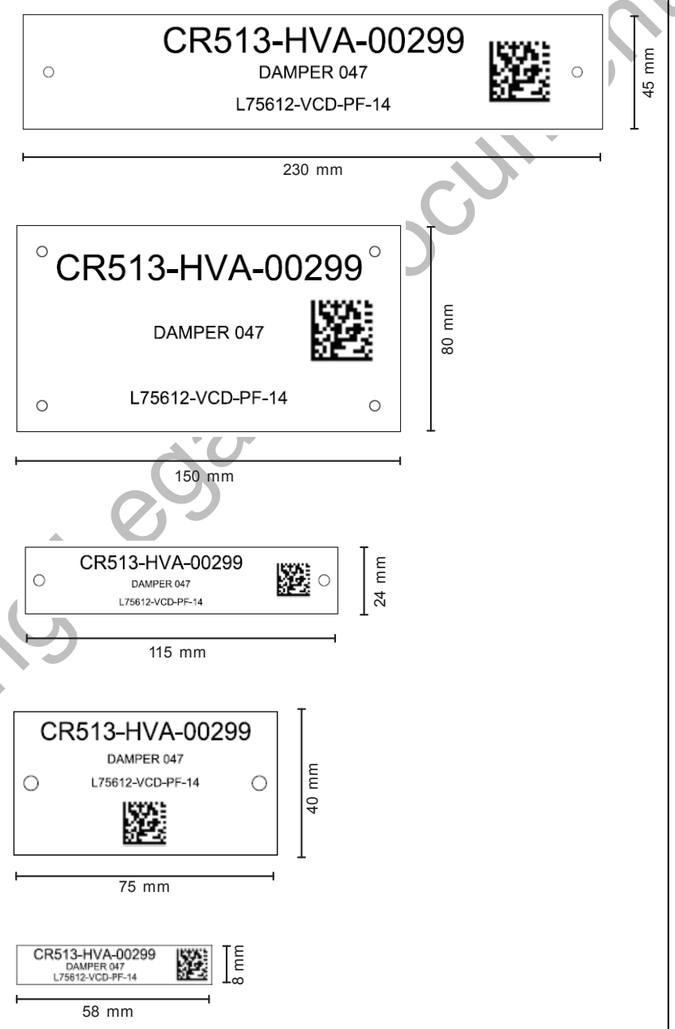

Figure 4 - Extract from CR-XRL-06-STD-CR001-00031 - Asset Identification Standard

Learning Legacy Document

4.0 Component Labelling

4.1 Cabinets

4.1.1 Equipment Cabinet

References		
T-Sheet	**Name**	**Specification Reference**
DRS-306 DRS-307	Glazed Equipment Cabinet Door - Platform End Walls; Glazed PSD Cabinet Door - Platform End Walls	JL20 JH11

CRL Asset Class Code - L215611- Cabinets	
Class Description (ADD Master Configuration Baseline)	Cabinets are essentially cases that are usually constructed from sheet metal and resemble a box structure and may have shelves and doors. They are designed to house electronic equipment such as servers, processors, evaluators, object controllers etc. The Cabinet may sit within other housings such as a location case or placed within a stack in an equipment room. The back of the Cabinet may have slot interfaces to accept COM Boards or other processing equipment. Cabinets are used in many systems across various disciplines e.g. Signalling, Telecoms, Distribution.
Labelling Requirements (Asset Naming and Labelling Convention Document)	For Cabinets, the (white) Asset Tag label will be positioned at the top left corner of the cabinet door, so long as it does not obstruct operation. If this is not acceptable, the label can be positioned at the bottom left corner of the cubicle door or in a consistent position throughout. Cabinets with complex equipment in should feature a schematic of the Cabinet and associated Asset Tags and Equipment Tags within will be affixed to or adjacent to the Cabinet.
General Labelling Guidance	• Position: Affixed to the left bottom side of the cabinet's skirting • Standard Size: Smallest possible size 58x8mm • Material Preference: Stainless Steel • Colour Preference: Stainless Steel with laser engraved black text • Other assets that make up the cabinet will have their labels inside the enclosure

Note*: Also applies to PSD Cabinet

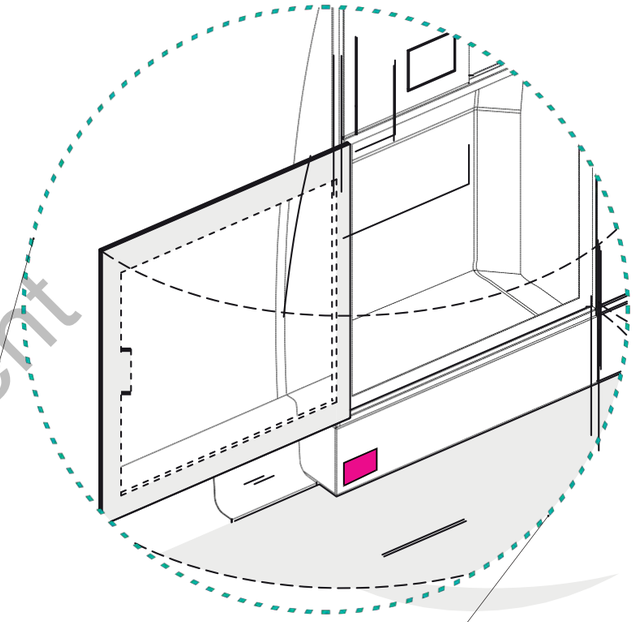

Figure 6 - Equipment Cabinet - Exterior Label

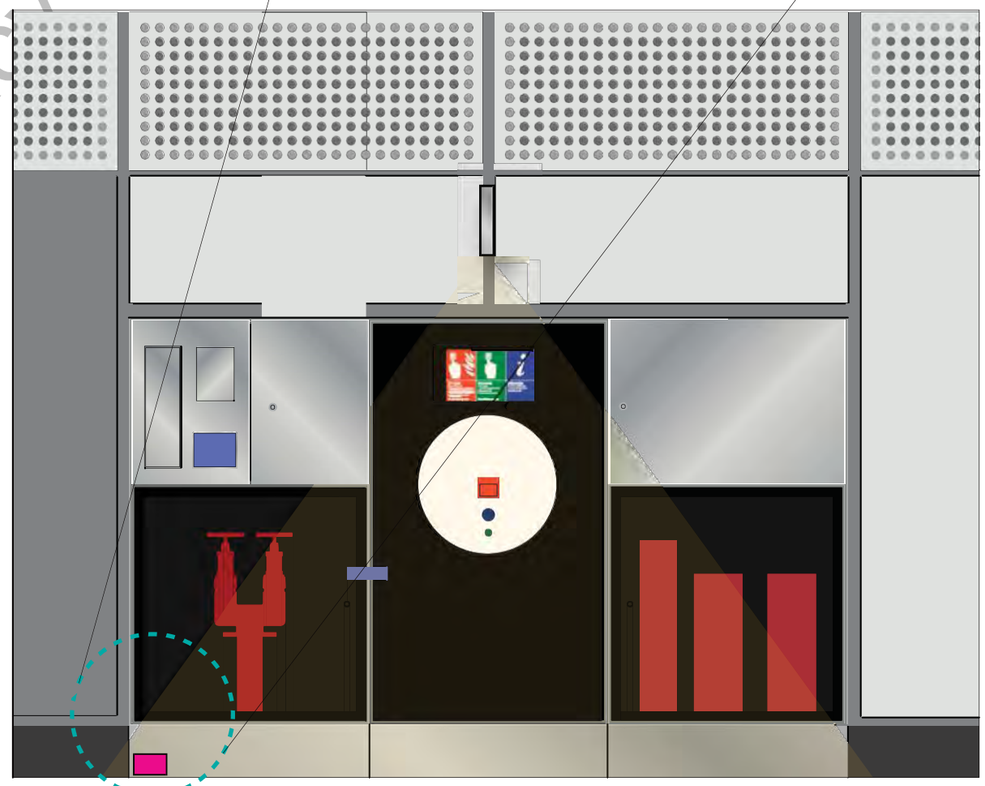

Figure 5 - Equipment Cabinet Recessed into GFRC

Key - Inside label / rear side label | Exterior label

Learning Legacy Document

 © Crossrail Limited

4.1.2 Fire Extinguisher

References		
T-Sheet	**Name**	**Specification Reference**
FX-801 FX-802 FX-806	Hydrant Enclosure - Unit type 1 Hydrant Enclosure - Unit type 2 Hydrant Enclosure - Unit type 3	JN10 (JH40 / JZ25)

CRL Asset Class Code - L881- Fire Extinguisher	
Class Description (ADD Master Configuration Baseline)	A fire extinguisher is a portable apparatus containing chemicals or water that can be discharged in a rapid stream to extinguish a small fire.
Labelling Requirements (Asset Naming and Labelling Convention Document)	Fire extinguishers will have an asset tag label placed on a permanent structure next to the item and inside the cabinet, preferably at the top left corner or the cabinet door. Any equipment tag associated within the cabinet will be affixed to or adjacent to the rack.
General Labelling Guidance	• Position: Placed inside the cabinet in the lateral inner wall of the door's leading edge, close to the bottom edge. • Standard Size: Smallest possible size 58x8mm • Material Preference: Acrylic • Colour Preference: White label with black text.

Lear

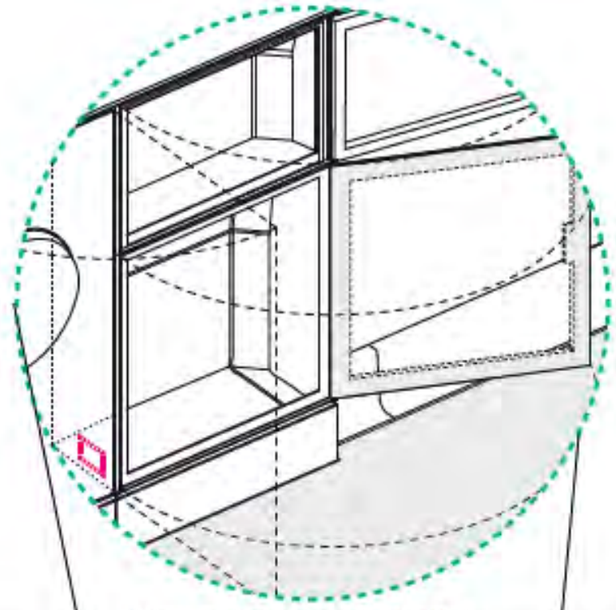

Figure 8 - Fire Extinguisher Location

Figure 7 - Fire Extinguisher Cabinet Recessed into GFRC

Key - Inside label / rear side label Exterior label

4.1.3 Fire Hydrant

References		
T-Sheet	**Name**	**Specification Reference**
FX-801 FX-802 FX-806	Hydrant Enclosure - Unit Type 1 Hydrant Enclosure - Unit Type 2 Hydrant Enclosure - Unit Type 3	JN10 (JH40 / JZ25)

CRL Asset Class Code - L71671- Fire hydrants	
Class Description (ADD Master Configuration Baseline)	A fire hydrant is an upright pipe with a nozzle or spout for drawing water from a water main to use when fighting a fire.
Labelling Requirements (Asset Naming and Labelling Convention Document)	Fire hydrants will have an asset tag label attached to the structure on which it is mounted, where it is easily visible and inside the cabinet, preferably at the top left corner or the cabinet door. Any equipment tag associated within the cabinet will be affixed to or adjacent to the rack.
General Labelling Guidance	• Position: Placed inside the cabinet in the lateral inner wall of the door's leading edge, close to the bottom edge. • Standard Size: Smallest possible size 58x8mm • Material Preference: Acrylic • Colour Preference: White label with black text.

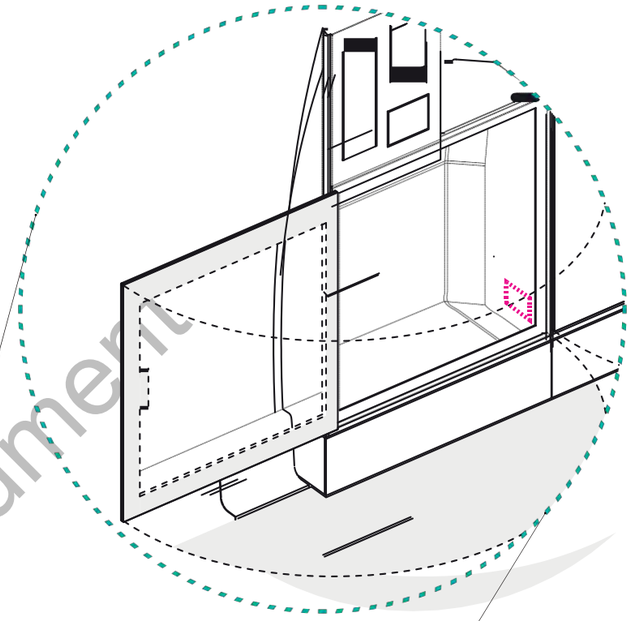

Figure 10 - Fire Hydrant Location

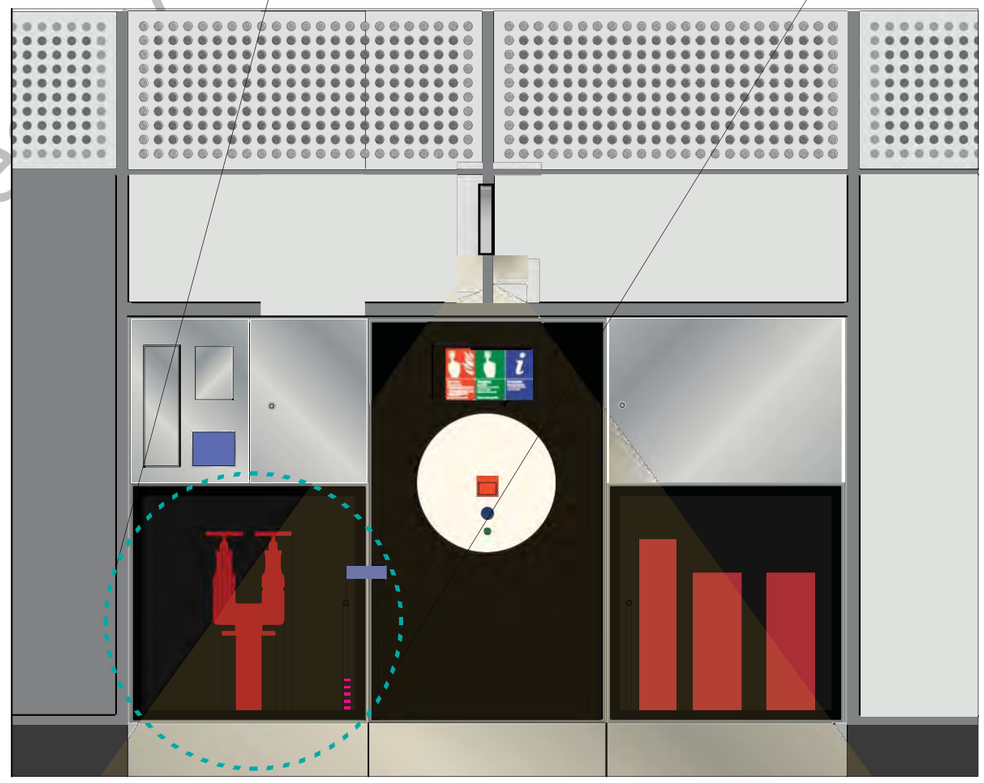

Figure 9 - Fire Hydrant Cabinet Recessed into GFRC

Key - Inside label / rear side label Exterior label

Learning Le Document

 © Crossrail Limited

4.1.4 Cabinets around PHPs

References		
T-Sheet	**Name**	**Specification Reference**
FX-305	Standard LU Help Point	JN10

CRL Asset Class Code - L892- CAP - Help Point Frame	
Class Description (ADD Master Configuration Baseline)	The A frame around passenger help points (PHPs) is a furnishing product that houses passenger help points and often other equipment such as fire hydrants, fire extinguishers, etc. The equipment is a frame within a wall often located adjacent to platforms. No doors are affixed to the cabinets to enable easy access and visibility for the passengers. A lockable cabinet with doors may be located within the cabinet around passenger help points.
Labelling Requirements (Asset Naming and Labelling Convention Document)	The asset tag label will be placed adjacent to the frame such as on the platform wall or within the frame inner section.
General Labelling Guidance	• Position: Placed inside the cabinet on door / frame, close to the PHP in a central upper position. • Standard Size: Smallest possible size 58x8mm • Material Preference: Flexible Acrylic to adapt to surface • Colour Preference: White label with black text.

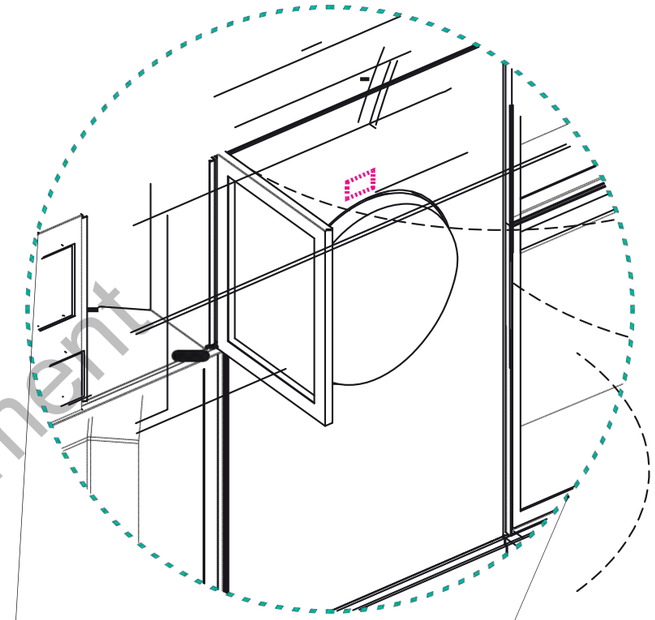

Figure 12 - Cabinet around PHP's - Inside Label

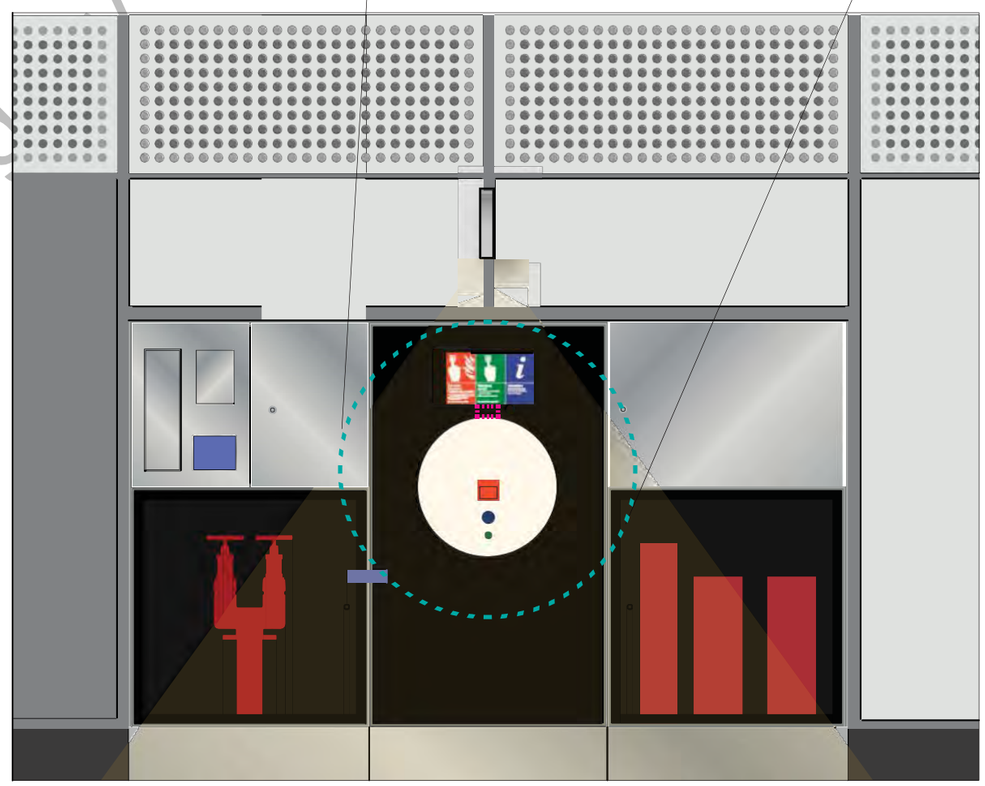

Figure 11 - Cabinet around PHPs Recessed into GFRC

Key - Inside label / rear side label Exterior label

Learning Legacy Document

4.2 Benches

4.2.1 Bench / Lean Bar

References		
T-Sheet	**Name**	**Specification Reference**
FX-501 FX-504 FX-505 FX-506	4 Seat Bench - wall mounted 4 Seat Bench - roundel mounted Lean Bar - Bespoke 4 Seat Bench - floor mounted	JN10

CRL Asset Class Code - L82255 - Bench	
Class Description (ADD Master Configuration Baseline)	A bench is a piece of furniture on which several people may sit at the same time.
Labelling Requirements (Asset Naming and Labelling Convention Document)	A bench will only have a label for the asset tag attached to the physical item on underside of the bench at either end of the asset.
General Labelling Guidance	• Position: Placed on the side edge of bench/ lean bar fixing bracket. When possible place always on left side bracket. • Standard Size: Smallest possible size 58x8mm • Material Preference: Stainless Steel • Colour Preference: Stainless Steel with laser engraved black text

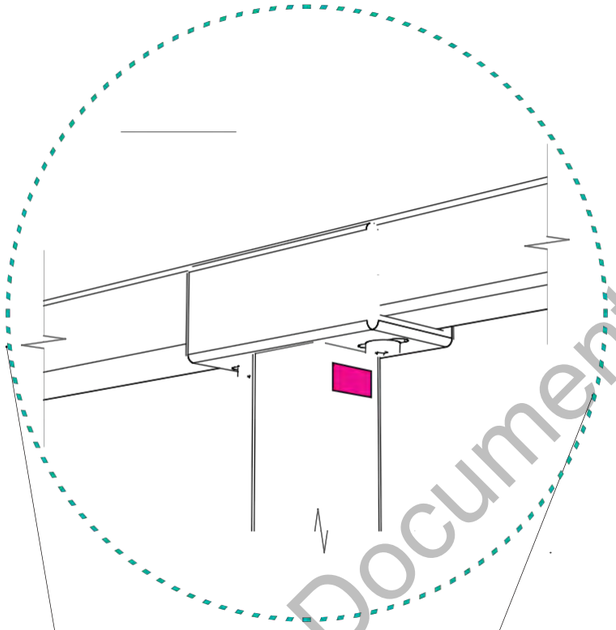

Figure 14 - Floor Mounted Bench Bracket Zoom

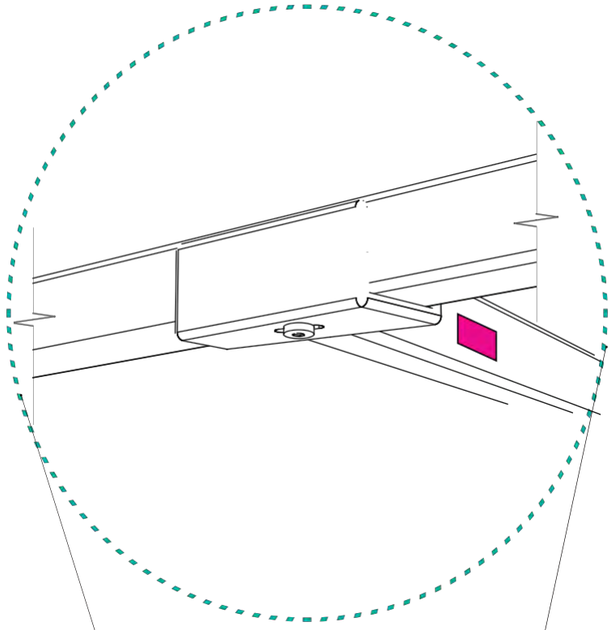

Figure 16 - Wall Mounted Bench Bracket Zoom

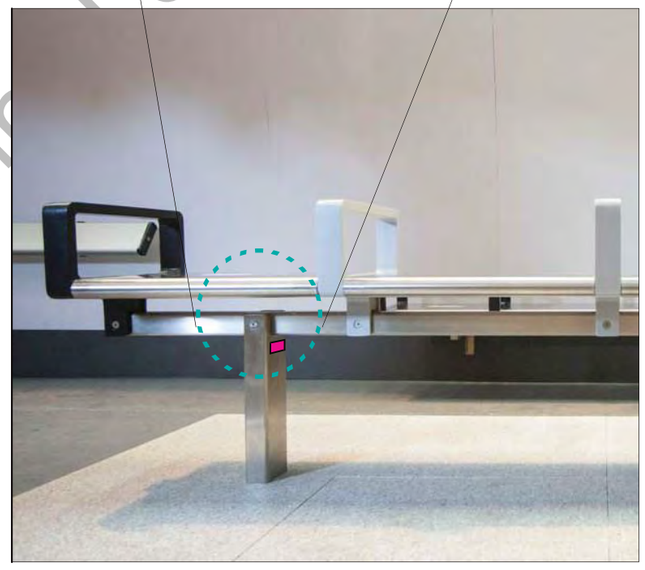

Figure 13 - 4 Seat Floor Mounted Bench

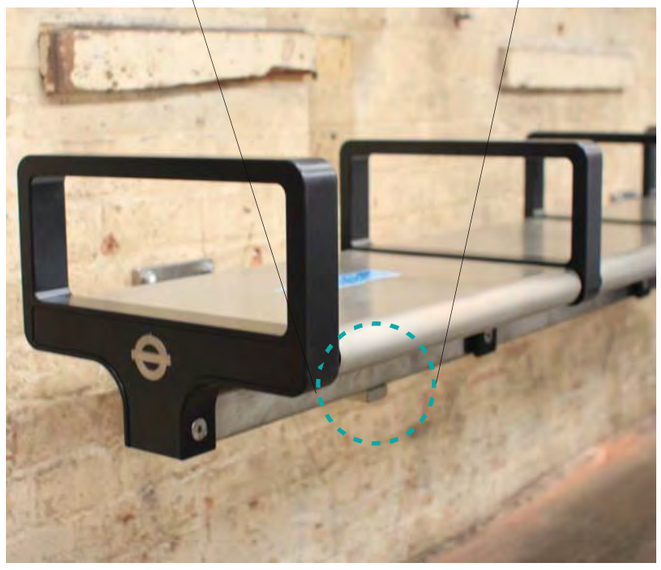

Figure 15 - 4 Seat Wall Mounted Bench

Key - Inside label / rear side label Exterior label

Learning Legacy Document

 © Crossrail Limited

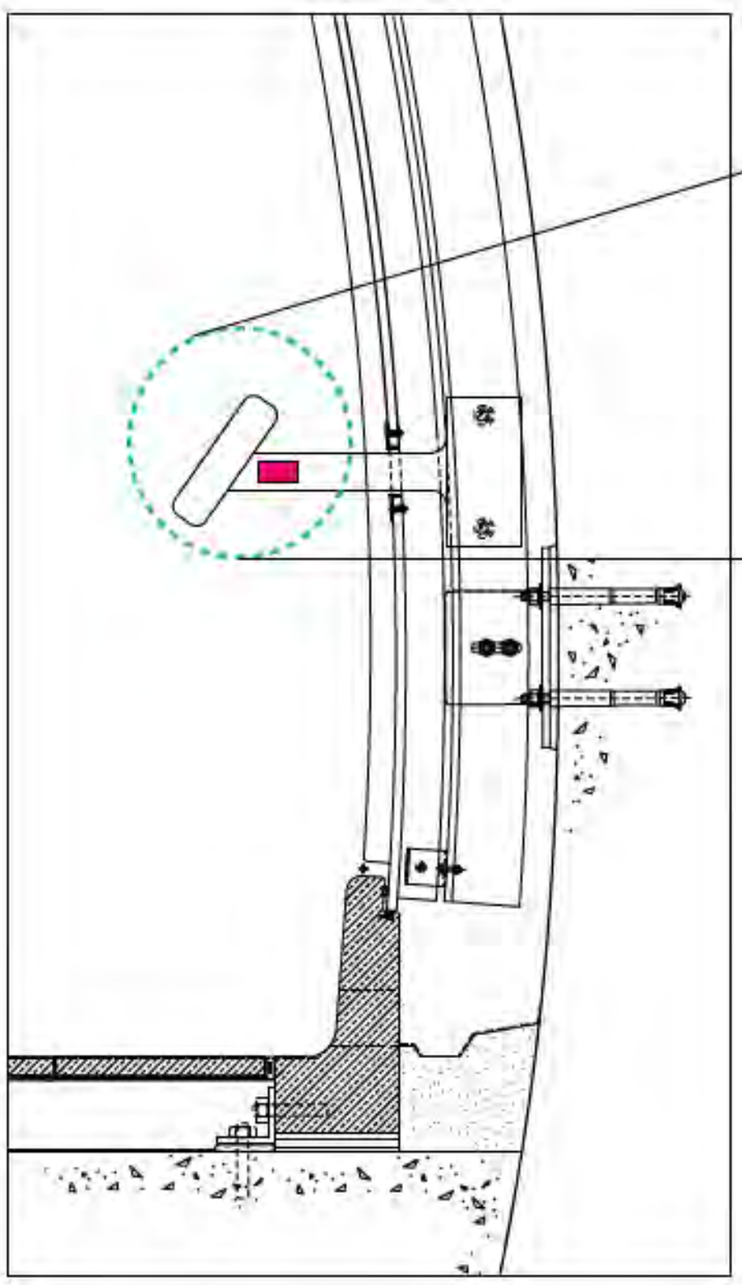

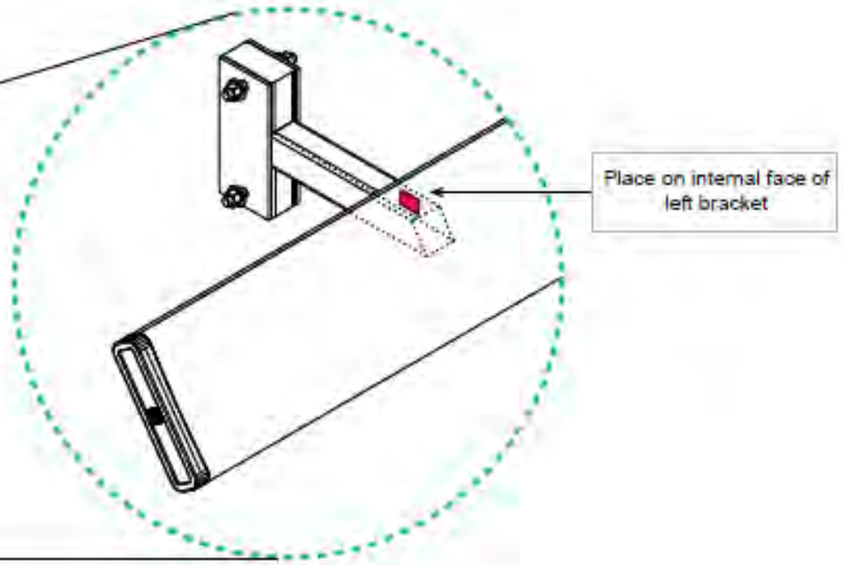

Figure 18 - Wall Mounted Lean Bar Zoom

Figure 17 - Lean Bar Side Elevation Detail

Key - Inside label / rear side label | Exterior label

4.3 Service Boom

4.3.1 Cross Passage Light

References		
T-Sheet	**Name**	**Specification Reference**
SPL-301	Recessed Linear Downlight	JY73

CRL Asset Class Code - L74731 - Fixed Luminaires for general lighting	
Class Description (ADD Master Configuration Baseline)	A fixed luminaire is an electrical device used to create artificial light by use of an electric lamp.
Labelling Requirements (Asset Naming and Labelling Convention Document)	Fixed luminaires for general lighting will have an asset tag attached to the physical item but shall not impair performance of the equipment. This is because this asset is not expected to be a regularly serviced asset and it is not expected to be regularly removed or moved.
General Labelling Guidance	• Position: Place inside luminaire housing, on permanent structure, visible only when opened for maintenance. • Standard Size: Smallest possible size 58x8mm • Material Preference: Acrylic • Colour Preference: White label with black text.

Figure 20 - Cross Passage Light Hinged Open Panel - Label placed inside

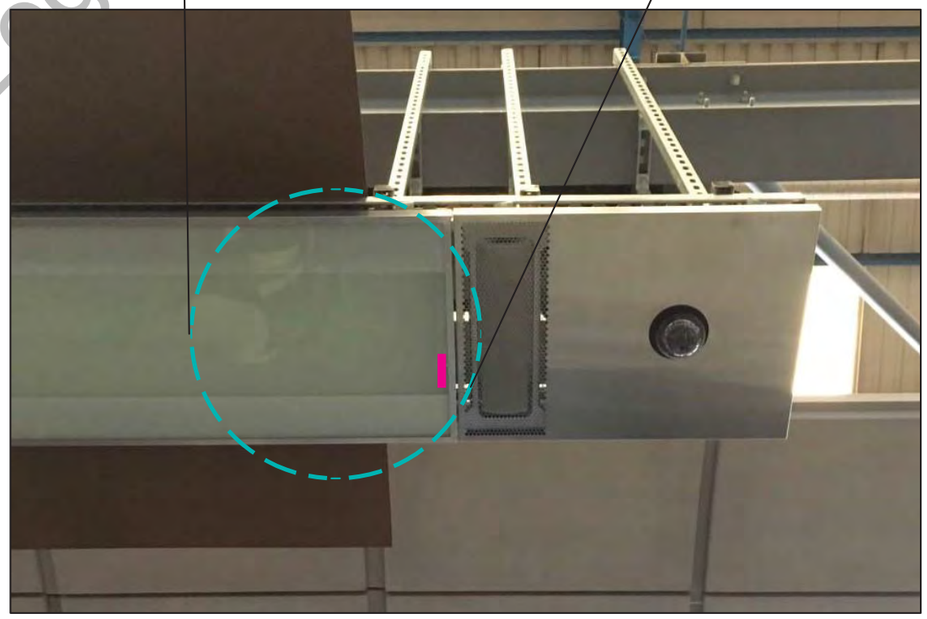

Figure 19 - Service Boom - Cross Passage Lightbox

Key - Inside label / rear side label Exterior label

Learning Legacy Doc

 © Crossrail Limited

4.3.2 Service Boom Speakers

References		
T-Sheet	**Name**	**Specification Reference**
FX-809	Service Boom Fixtures	JN10

CRL Asset Class Code - L76116 - LSK - Loudspeakers	
Class Description (ADD Master Configuration Baseline)	Loudspeakers refer to the electronic devices that convert electrical signal into sound. They are used for large amplitude audio transmission for public address uses, such as passenger information, instructions, or in emergencies.
Labelling Requirements (Asset Naming and Labelling Convention Document)	Loudspeakers will have an asset tag label placed on a permanent structure next to the item in a position that can be viewed without the need for specialist access equipment or railway possessions and where the label will not be permanently covered.
General Labelling Guidance	• Position: Place inside speaker housing frame, on permanent structure, visible only when opened for maintenance. • Standard Size: Smallest possible size 58x8mm • Material Preference: Acrylic • Colour Preference: White label with black text.

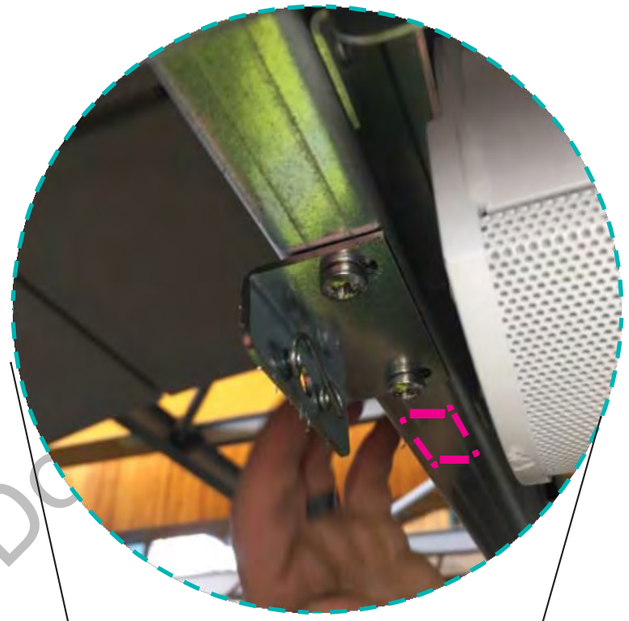

Figure 22 - Service Boom Speaker - Label Inside Speaker Housing

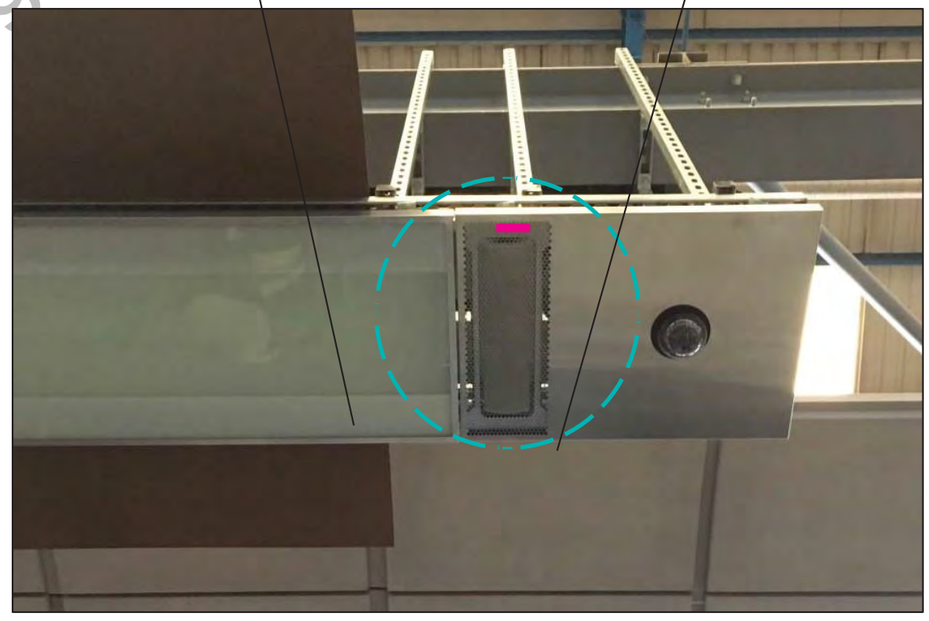

Figure 21 - Service Boom - Speaker Housing

Key - Inside label / rear side label Exterior label

Learning Legacy Do

4.3.3 Service Boom CCTV Cameras

References		
T-Sheet	**Name**	**Specification Reference**
FX-903	Camera Bracket - Soffit mounted	JN10 JL10

CRL Asset Class Code - L76261 - CAM - Camera	
Class Description (ADD Master Configuration Baseline)	Cameras are video devices used for monitoring, surveillance and security purposes. They are mounted onto the surface of a structure and capture images of a specific location to be sent back to the control centre for live monitoring or to be digitally stored on a server's hard disk. Depending on the location that is under surveillance, the camera can be directed at a fixed location or rotated to view a larger area, either in a fixed pattern or controlled remotely from the CCTV control centre.
Labelling Requirements (Asset Naming and Labelling Convention Document)	An asset tag label will be attached to the place where the asset is to be located. Preferably affixed to the structural system that supports the asset.
General Labelling Guidance	• Position: Placed inside the openable panel in a permanent fixing structure. • Standard Size: Smallest possible size 58x8mm • Material Preference: Acrylic • Colour Preference: White label with black text.

Figure 24 - Service Boom CCTV Camera Hinged Open Panel - Label Inside

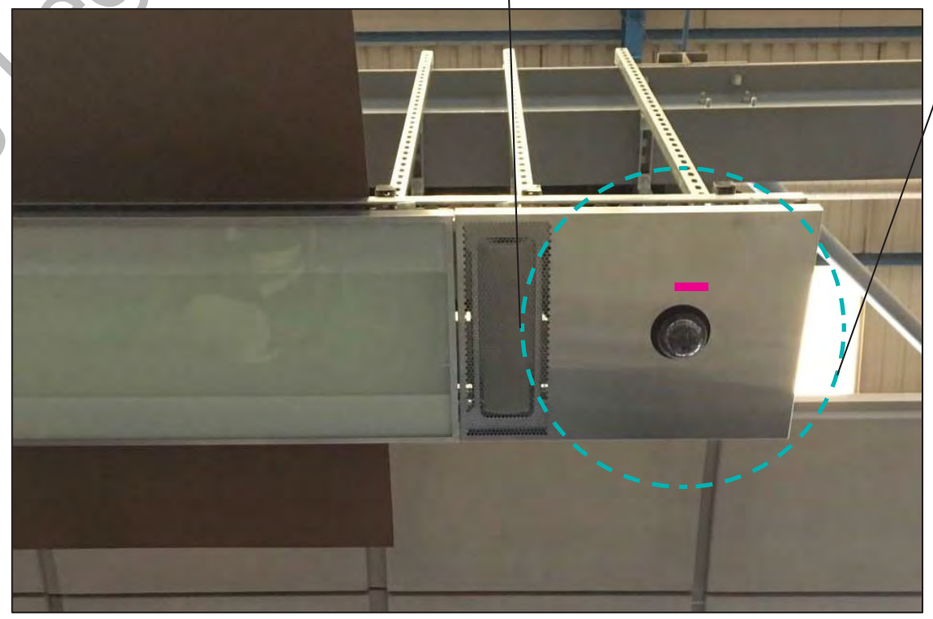

Figure 23 - Service Boom - CCTV Camera m

Key - Inside label / rear side label | Exterior label

Learning Legacy Document

 © Crossrail Limited

4.4 Totems

4.4.1 Totem Mounted Luminaire

References		
T-Sheet	**Name**	**Specification Reference**
SPL-501	Totem Mounted Luminaire	JY73

CRL Asset Class Code - L74731 - Fixed Luminaires for general lighting	
Class Description (ADD Master Configuration Baseline)	A fixed luminary is an electrical device used to create artificial light by use of an electric lamp.
Labelling Requirements (Asset Naming and Labelling Convention Document)	Fixed luminaires for general lighting will have an asset tag attached to the physical item but shall not impair performance of the equipment. This is because this asset is not expected to be a regularly serviced asset and it is not expected to be regularly removed or moved.
General Labelling Guidance	• Position: Placed inside the totem access panel • Standard Size: Smallest possible size 58x8mm • Material Preference: Acrylic • Colour Preference: White label with black text.

Figure 26 - Totem - Hinged Open Panel - Label Inside

Figure 25 - Typical Interior Totem

Key - Inside label / rear side label Exterior label

Learning Legacy Document

4.4.2 Totem Speakers

References		
T-Sheet	**Name**	**Specification Reference**
SGN-202 SGN-220 SGN-221	Freestanding internal totem Freestanding external totem Freestanding external signage totem	JN15

CRL Asset Class Code - L76116 - LSK - Loudspeakers	
Class Description (ADD Master Configuration Baseline)	Loudspeakers refer to the electronic devices that convert electrical signal into sound. They are used for large amplitude audio transmission for public address uses, such as passenger information, instructions, or in emergencies.
Labelling Requirements (Asset Naming and Labelling Convention Document)	Loudspeakers will have an asset tag label placed on a permanent structure next to the item in a position that can be viewed without the need for specialist access equipment or railway possessions and where the label will not be permanently covered
General Labelling Guidance	• Position: Placed inside the totem access panel • Standard Size: Smallest possible size 58x8mm • Material Preference: Acrylic • Colour Preference: White label with black text.

Figure 28 - Totem Hinged Open Panel - Inside Label

Figure 27 - Typical Interior Totem

Key - Inside label / rear side label Exterior label

Learning Library Document

© Crossrail Limited

4.5 Platform Edge Screen (PES)

4.5.1 PES Speakers

References		
T-Sheet	**Name**	**Specification Reference**
FX-809	Service Boom Fixtures	JN10

CRL Asset Class Code - L16116 - LSK - Loudspeakers	
Class Description (ADD Master Configuration Baseline)	Loudspeakers refer to the electronic devices that convert electrical signal into sound. They are used for large amplitude audio transmission for public address uses, such as passenger information, instructions, or in emergencies.
Labelling Requirements (Asset Naming and Labelling Convention Document)	Loudspeakers will have an asset tag label placed on a permanent structure next to the item in a position that can be viewed without the need for specialist access equipment or railway possessions and where the label will not be permanently covered
General Labelling Guidance	• Position: Placed inside the hinged grilled panel on a permanent steel structure close to the speaker. *Do not place label on CMS tray cover. • Standard Size: Smallest possible size 58x8mm • Material Preference: Acrylic • Colour Preference: White label with black text.

Learning document

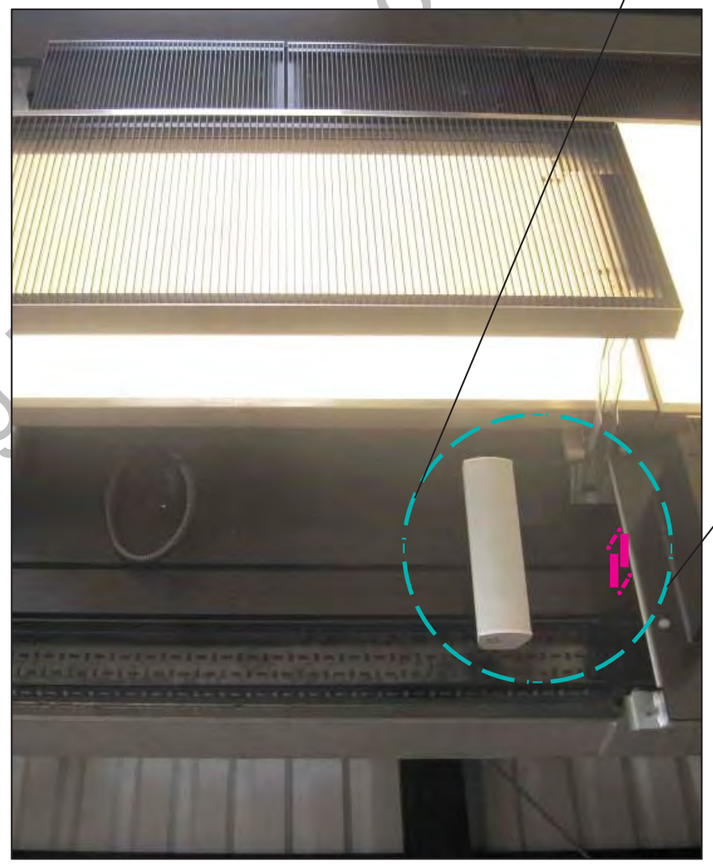

Figure 29 - PES Hinged Grilled Panel with Incorporated Speaker Inside

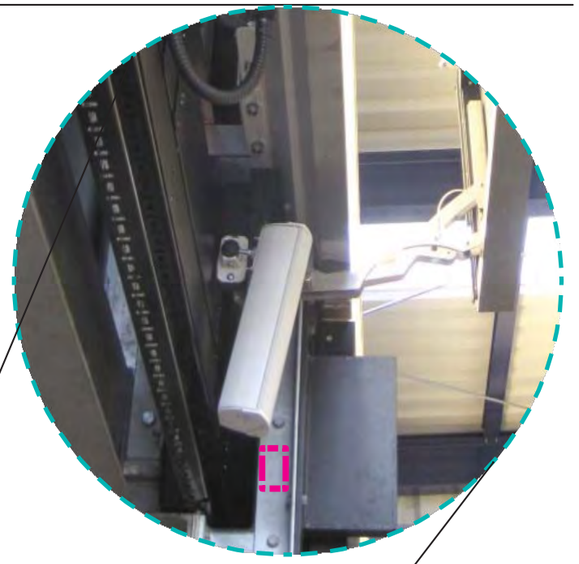

Figure 30 - PES Speaker Detail - Section

Key - Inside label / rear side label Exterior label

4.5.2 Platform Lightbox

References		
T-Sheet	**Name**	**Specification Reference**
SPL-901 SPL-92	Platform Lightbox - Architectural Casing Platform lightbox - Luminaire	JY73

CRL Asset Class Code - L74731 - Fixed Luminaires for general lighting	
Class Description (ADD Master Configuration Baseline)	A fixed luminaire is an electrical device used to create artificial light by use of an electric lamp.
Labelling Requirements (Asset Naming and Labelling Convention Document)	Fixed luminaires for general lighting will have an asset tag attached to the physical item but shall not impair performance of the equipment. This is because this asset is not expected to be a regularly serviced asset and it is not expected to be regularly removed or moved.
General Labelling Guidance	• Position: Placed on top of the platform lightbox; not visible from eye level. One label shall be placed per lightbox unit. • Standard Size: Smallest possible size 58x8mm • Material Preference: Stainless Steel • Colour Preference: Stainless Steel with laser engraved black text.

Figure 32 - Platform lightbox - Exterior Label

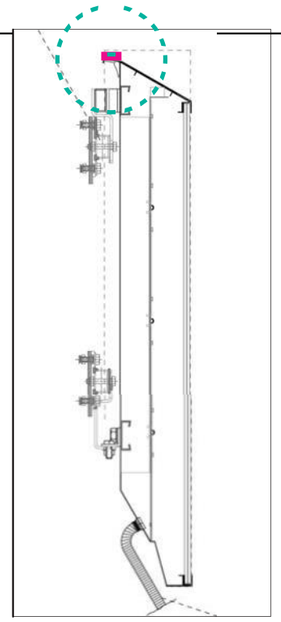

Figure 33 - Platform lightbox detail

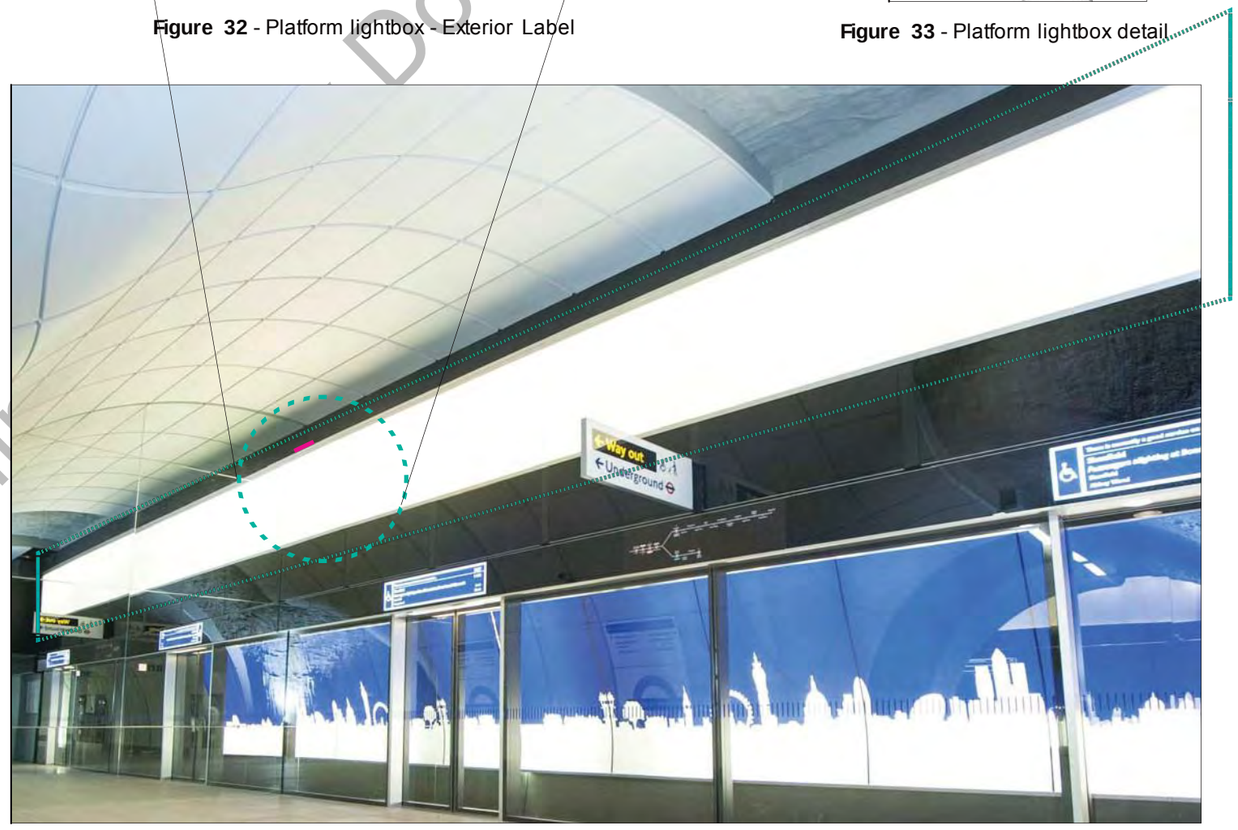

Figure 31 - PES General View - Platform Lightbox

Key - Inside label / rear side label Exterior label

Learning Document

 © Crossrail Limited

4.6 Platform Screen Doors (PSD)

References		
T-Sheet	**Name**	**Specification Reference**
DRS-301	Platform Edge Screen Doors	JL20 JH11

CRL Asset Class Code - FU104- **Platform Screen Doors Assembly**	
Class Description (ADD Master Configuration Baseline)	A door is a movable structure used to open and close off an entrance. This class covers doors which open by folding back in sections. Where the door is unpowered each individual door and associated sliding parts will constitute an individual asset. For powered doors all further powered items; motors, gearbox and sensors will be listed as separate assets
Labelling Requirements (Asset Naming and Labelling Convention Document)	Each Platform Screen Door assembly shall be numbered consecutively down the platform.
General Labelling Guidance	• Position: Placed in the rear face of access panel to every PSD module. Only visible when accessing the panel • Standard Size: Smallest possible size 58x8mm • Material Preference: Acrylic • Colour Preference: White label with black text.

Functional Unit Representation	
Automatic Sliding Door Customer Information Display PSD Downlight - Fixed Luminaires for general lighting	L41109 L76125 L74731

Figure 34 - Platform Edge Screen

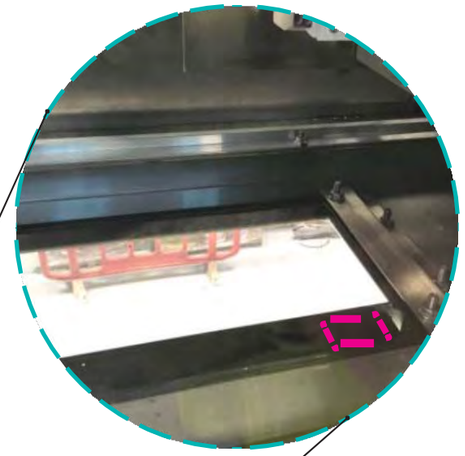

Figure 35 - PES Lightbox Access Panel - Inside label View from above

Key - Inside label / rear side label Exterior label

Learning Document

4.7 CCTV Cameras

References		
T-Sheet	**Name**	**Specification Reference**
FX-901 FX-902 FX-903	Camera Housing Camera Bracket - Wall mounted Camera Bracket - Soffit mounted	JL10

CRL Asset Class Code - L76261 - CAM - Cameras	
Class Description (ADD Master Configuration Baseline)	Cameras are video devices used for monitoring, surveillance and security purposes. They are mounted onto the surface of a structure and capture images of a specific location to be sent back to the control centre for live monitoring or to be digitally stored on a server's hard disk. Depending on the location that is under surveillance, the camera can be directed at a fixed location or rotated to view a larger area, either in a fixed pattern or controlled remotely from the CCTV control centre.
Labelling Requirements (Asset Naming and Labelling Convention Document)	An asset tag label will be attached to the place where the asset is to be located. Preferably affixed to the structural system that supports the asset.
General Labelling Guidance	• Position: Placed on upper part of camera bracket. *For double camera brackets, place both labels together on upper face of bracket. • Standard Size: Smallest possible size 58x8mm • Material Preference: Stainless Steel • Colour Preference: Stainless Steel with laser engraved black text.

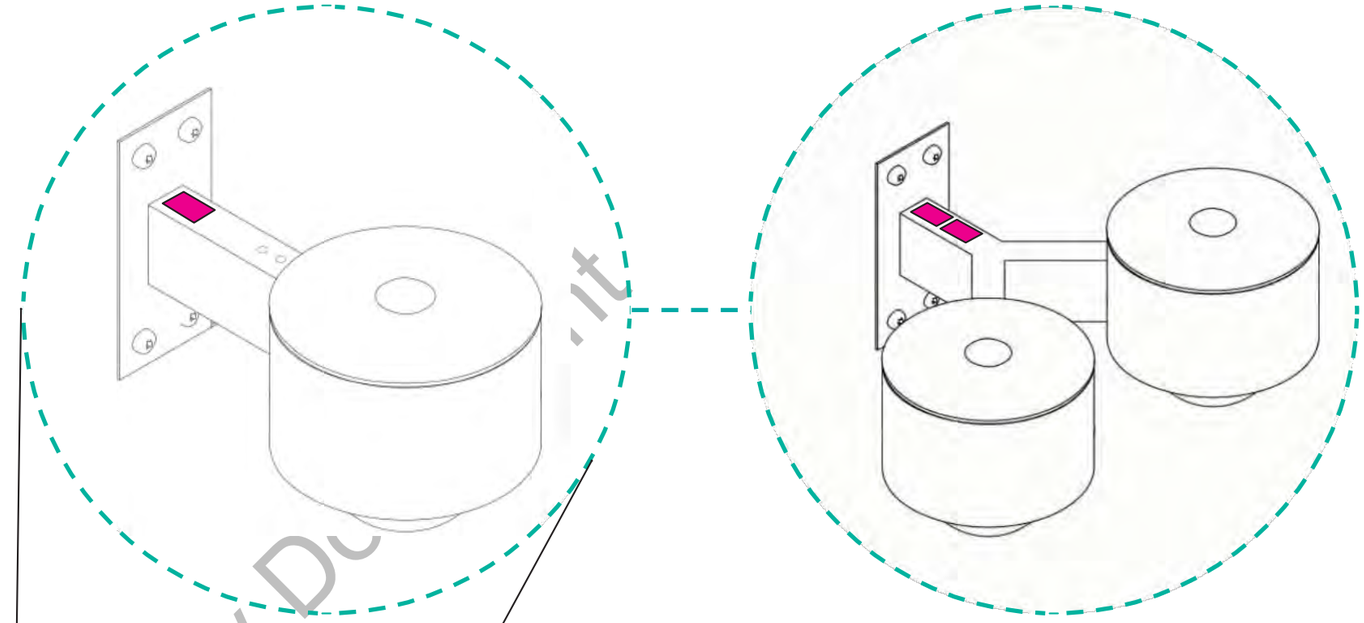

Figure 37 - Wall Mounted CCTV Camera - single and double

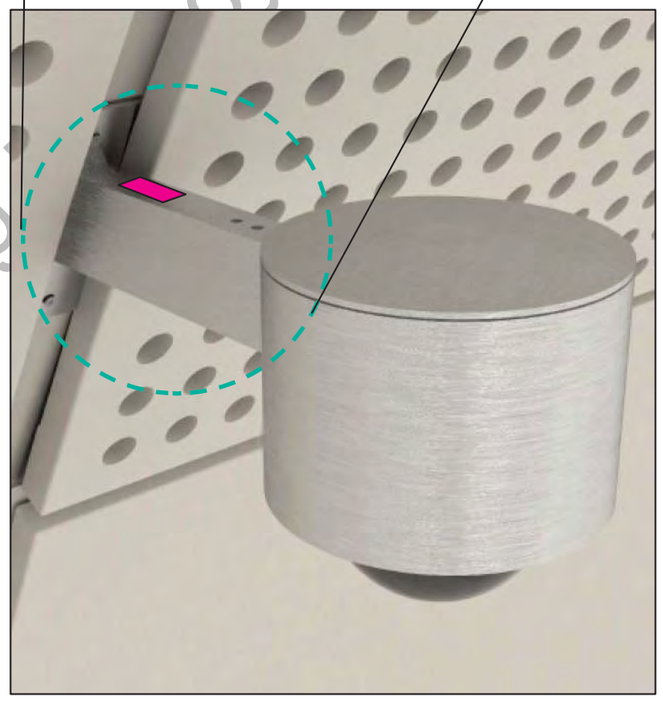

Figure 36 - Wall Mounted CCTV Camera

Key - Inside label / rear side label Exterior label

Learning Library Document

 © Crossrail Limited

4.8 Fixed Luminaires for General Lighting

4.8.1 Accent Light

References		
T-Sheet	**Name**	**Specification Reference**
SPL-801	Accent Spotlight	JY73

CRL Asset Class Code - L74731 - Fixed Luminaires for general lighting	
Class Description (ADD Master Configuration Baseline)	A fixed luminaire is an electrical device used to create artificial light by use of an electric lamp.
Labelling Requirements (Asset Naming and Labelling Convention Document)	Fixed luminaires for general lighting will have an asset tag attached to the physical item but shall not impair performance of the equipment. This is because this asset is not expected to be a regularly serviced asset and it is not expected to be regularly removed or moved.
General Labelling Guidance	• Position: Placed on upper part of spotlight bracket • Standard Size: Smallest possible size 58x8mm • Material Preference: Stainless Steel • Colour Preference: Stainless Steel with laser engraved black text.

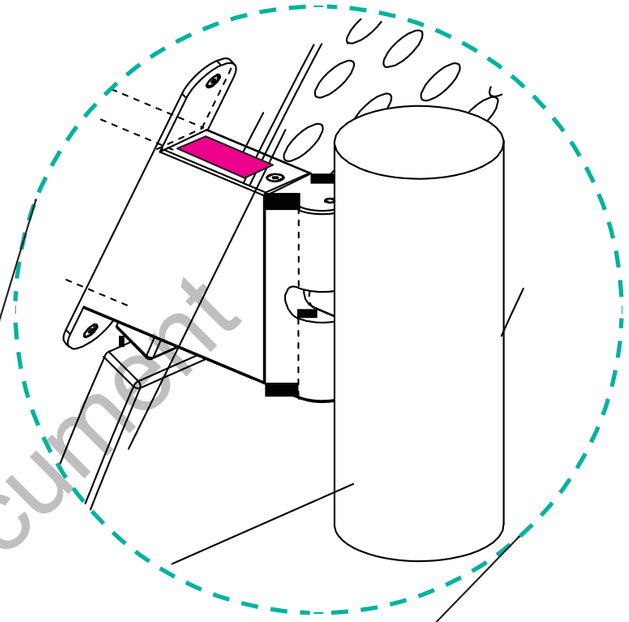

Figure 39 - Accent Spotlight

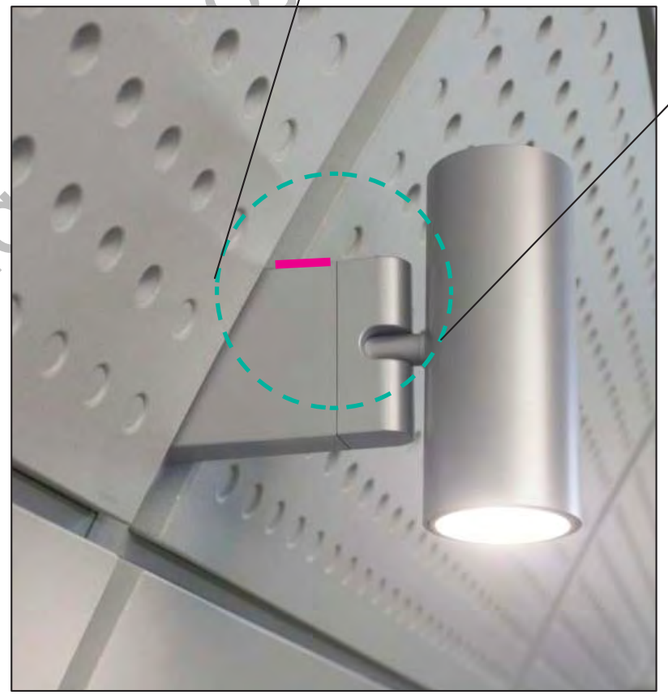

Figure 38 - Accent Spotlight

Key - Inside label / rear side label Exterior label

Learning Policy Document

4.8.2 Signage Panel Integrated Luminaire

References		
T-Sheet	**Name**	**Specification Reference**
SGN-120 SGN-223 SGN-228	Illuminated Sign Combined Help Point & Fire Hydrant Sign with integrated Luminaire Illuminated Pictogram Sign	JN15

CRL Asset Class Code - L74731 - Fixed Luminaires for general lighting	
Class Description (ADD Master Configuration Baseline)	A fixed luminaire is an electrical device used to create artificial light by use of an electric lamp.
Labelling Requirements (Asset Naming and Labelling Convention Document)	Fixed luminaires for general lighting will have an asset tag attached to the physical item but shall not impair performance of the equipment. This is because this asset is not expected to be a regularly serviced asset and it is not expected to be regularly removed or moved.
General Labelling Guidance	• Position: Placed inside the openable signage panel, affixed to a permanent structural element. • Standard Size: Smallest possible size 58x8mm • Material Preference: Acrylic • Colour Preference: White label with black text.

Note*: Label to be positioned alongside signage panel asset label

Figure 40 - Examples of typical illuminated signs - with hinged panel open

Key - Inside label / rear side label Exterior label

Learning Academy

 © Crossrail Limited

4.9 Switchable Signage

References		
T-Sheet	**Name**	**Specification Reference**
SGN-208 SGN-224 SGN-218	Switchable Sign Flush Sign Flush End Wall Signs	JN15

CRL Asset Class Code - L7473221 - SWS - Switchable Signage	
Class Description (ADD Master Configuration Baseline)	Switchable signage relates to an electronic display that provides a choice of messages or information. For example ticket offices may have individual switchable signs are fitted above each window. These are illuminated glass panels that display "Assistance and Tickets" when the office is open and turn plain black when the position is closed.
Labelling Requirements (Asset Naming and Labelling Convention Document)	An asset tag label will be placed on a permanent structure next to the item in a position that can be viewed without the need for specialist access equipment or railway possessions and where the label will not be permanently covered.
General Labelling Guidance	• Position: Placed on top of sign panel fixing bracket. If hanged, place label around hanging structure vertically. • Standard Size: Smallest possible size 58x8mm • Material Preference: Stainless Steel • Colour Preference: Stainless Steel with laser engraved black text.

Figure 43 - Typical Suspended Sign

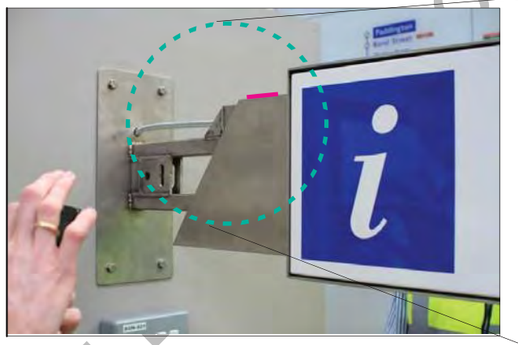

Figure 42 - Typical Curved Wall Projected Sign

Figure 41 - Typical Flat Wall Projected Sign

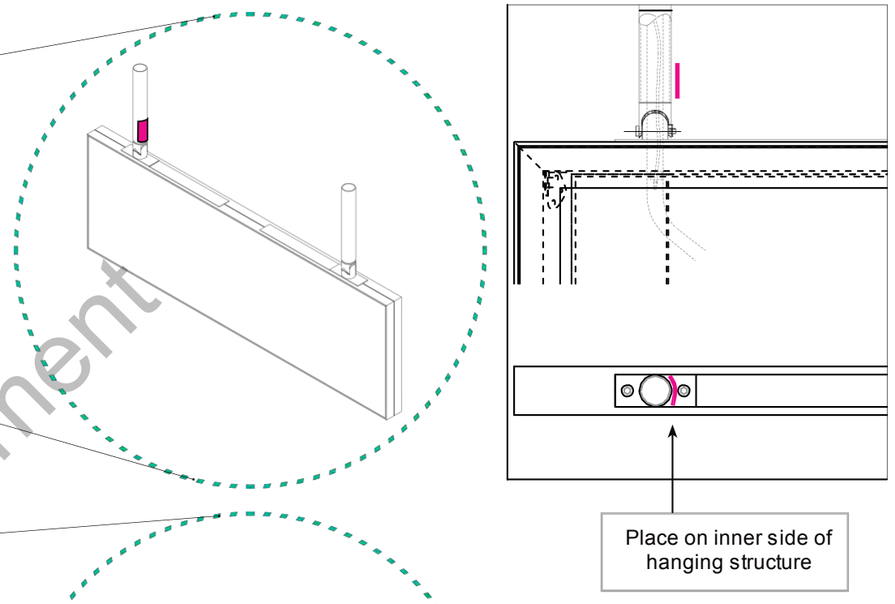

Figure 44 - Plan and elevation of suspended sign

Key - Inside label / rear side label Exterior label

Learning Document

4.10 Non - Switchable Signage

4.10.1 Non-Illuminated Sign

References		
T-Sheet	**Name**	**Specification Reference**
SGN-122 SGN-209	Non Illuminated Sign Fixed Sign All Directional and Information Signs, Regulation Signs and Advertising Signs	JN15

CRL Asset Class Code - L7473222 - NSS - Non-Switchable Signage	
Class Description (ADD Master Configuration Baseline)	Non-Switchable Signage relate to electronic displays or illuminated signs presenting a fixed message that can not be remotely changed.
Labelling Requirements (Asset Naming and Labelling Convention Document)	An asset tag label will be placed on a permanent structure next to the item in a position that can be viewed without the need for specialist access equipment or railway possessions and where the label will not be permanently covered.
General Labelling Guidance	• Position: Placed on top of sign panel fixing bracket. If hanged, place label around hanging structure vertically. • Standard Size: Smallest possible size 58x8mm • Material Preference: Stainless Steel • Colour Preference: Stainless Steel with laser engraved black text.

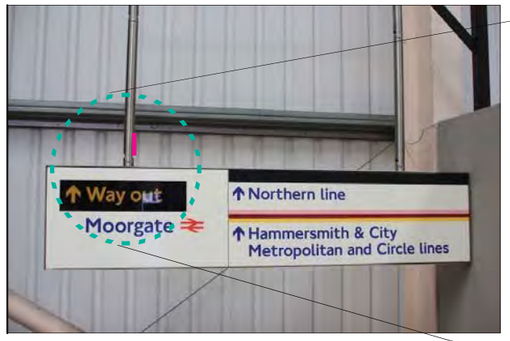

Figure 47 - Typical Suspended Sign

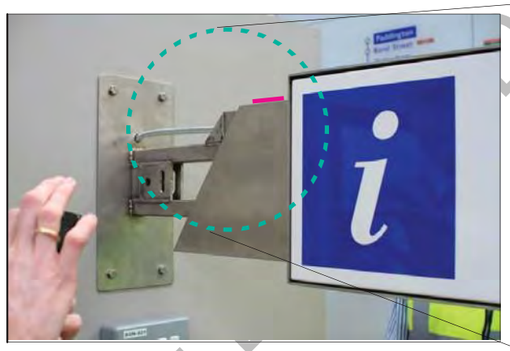

Figure 46 - Typical Curved Wall Projected Sign

Figure 45 - Typical Flat Wall Projected Sign

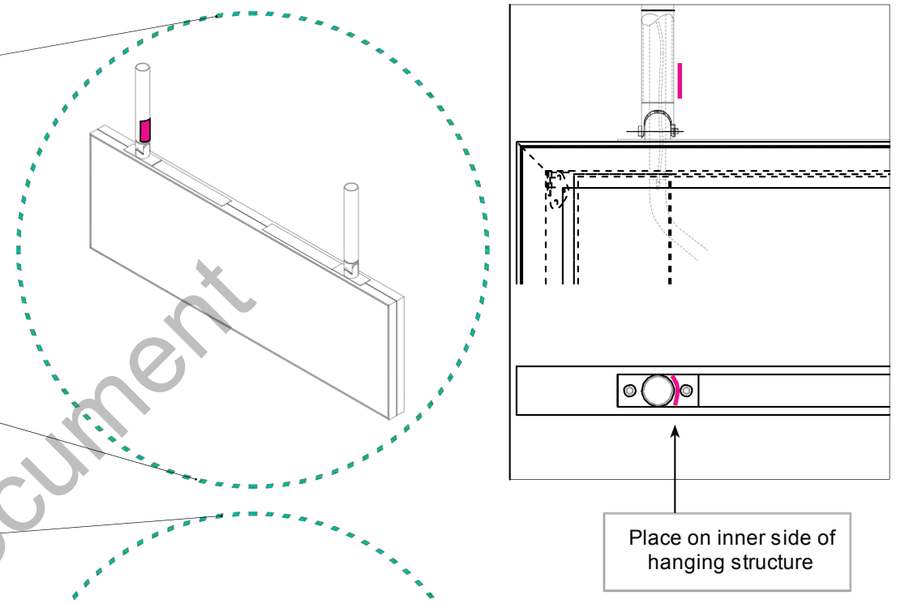

Figure 48 - Plan and elevation of suspended sign

Key - Inside label / rear side label Exterior label

Learning Document

 © Crossrail Limited

4.10.2 Illuminated Sign

References		
T-Sheet	**Name**	**Specification Reference**
SGN-120 SGN-218 SGN-222 SGN-223 SGN-224 SGN-227 SGN-228	Illuminated Sign Flush End Wall Signs Suspended Sign with integrated Luminaire Combined Help point and Fire Hydrant with integrated Luminaire Flush Sign Trackside Illuminated Roundel Illuminated Pictogram Sign All Electronic Signs	JN15

CRL Asset Class Code - L7473222 - NSS - Non-Switchable Signage	
Class Description (ADD Master Configuration Baseline)	Non-Switchable Signage relate to electronic displays or illuminated signs presenting a fixed message that can not be remotely changed.
Labelling Requirements (Asset Naming and Labelling Convention Document)	An asset tag label will be placed on a permanent structure next to the item in a position that can be viewed without the need for specialist access equipment or railway possessions and where the label will not be permanently covered.
General Labelling Guidance	• Position: Placed on top of sign panel fixing bracket. If hanged, place label around hanging structure vertically. • Standard Size: Smallest possible size 58x8mm • Material Preference: Stainless Steel • Colour Preference: Stainless Steel with laser engraved black text.

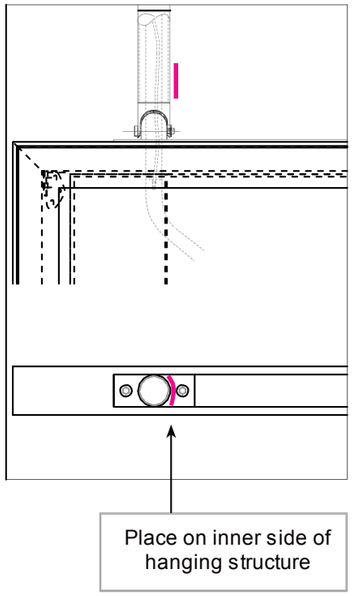

Figure 50 - Plan and elevation of suspended sign

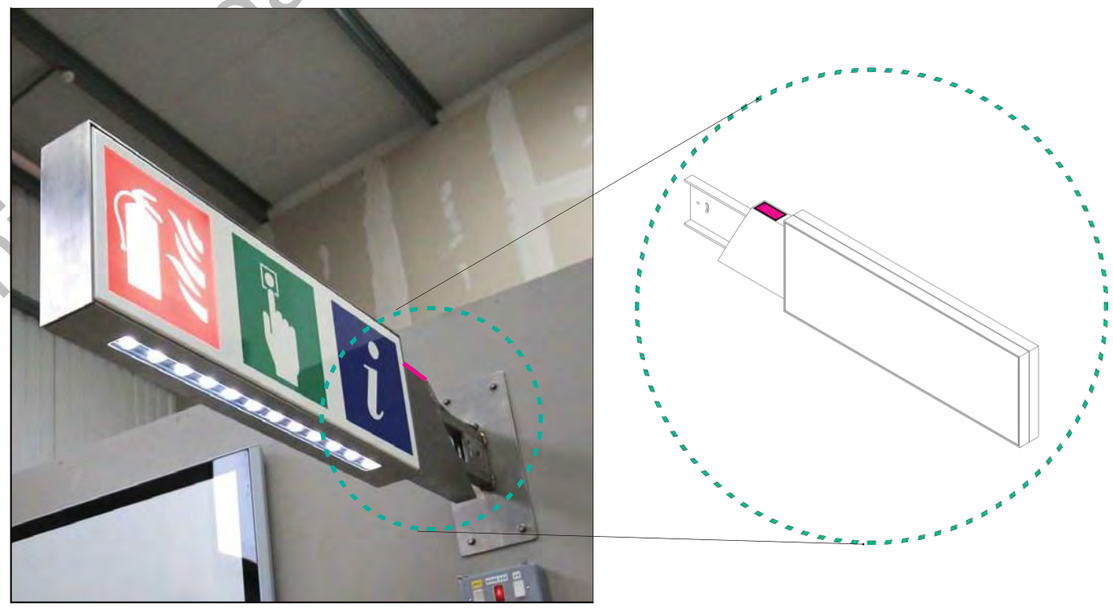

Figure 49 - Examples of Typical Illuminated Signage Panels - Hinged Panel Open and Closed

Key - Inside label / rear side label Exterior label

Learning Legacy Document

4.10.3 Curved Platform Wall Mounted Sign Panel

References		
T-Sheet	**Name**	**Specification Reference**
SGN-205 SGN-206	Curved Platform Wall Mounted Sign Panel Curved Concourse Wall Mounted Sign Panel	JN15

CRL Asset Class Code - L7473222 - NSS - Non-Switchable Signage	
Class Description (ADD Master Configuration Baseline)	Non-Switchable Signage relate to electronic displays or illuminated signs presenting a fixed message that can not be remotely changed.
Labelling Requirements (Asset Naming and Labelling Convention Document)	An asset tag label will be placed on a permanent structure next to the item in a position that can be viewed without the need for specialist access equipment or railway possessions and where the label will not be permanently covered.
General Labelling Guidance	• Position: Placed inside openable hinged panel, affixed to permanent structure. • Standard Size: Smallest possible size 58x8mm • Material Preference: Acrylic • Colour Preference: White label with black text.

Figure 51 - Typical Curved Wall Mounted Sign Panel

Figure 52 - Image Showing Curved Wall Hinged Sign Panel Opened - Inside Label

Key - Inside label / rear side label Exterior label

Learning Document

 © Crossrail Limited

4.10.4 Trackside Roundel

References		
T-Sheet	**Name**	**Specification Reference**
SGN-227	Trackside Illuminated Roundel	JN15

CRL Asset Class Code - L7473222 - NSS - Non-Switchable Signage	
Class Description (ADD Master Configuration Baseline)	Non-Switchable Signage relate to electronic displays or illuminated signs presenting a fixed message that can not be remotely changed.
Labelling Requirements (Asset Naming and Labelling Convention Document)	An asset tag label will be placed on a permanent structure next to the item in a position that can be viewed without the need for specialist access equipment or railway possessions and where the label will not be permanently covered.
General Labelling Guidance	• Position: Placed on top of roundel panel return, located at rear edge to the left hand side. • Standard Size: Smallest possible size 58x8mm • Material Preference: Acrylic • Colour Preference: White label with black text.

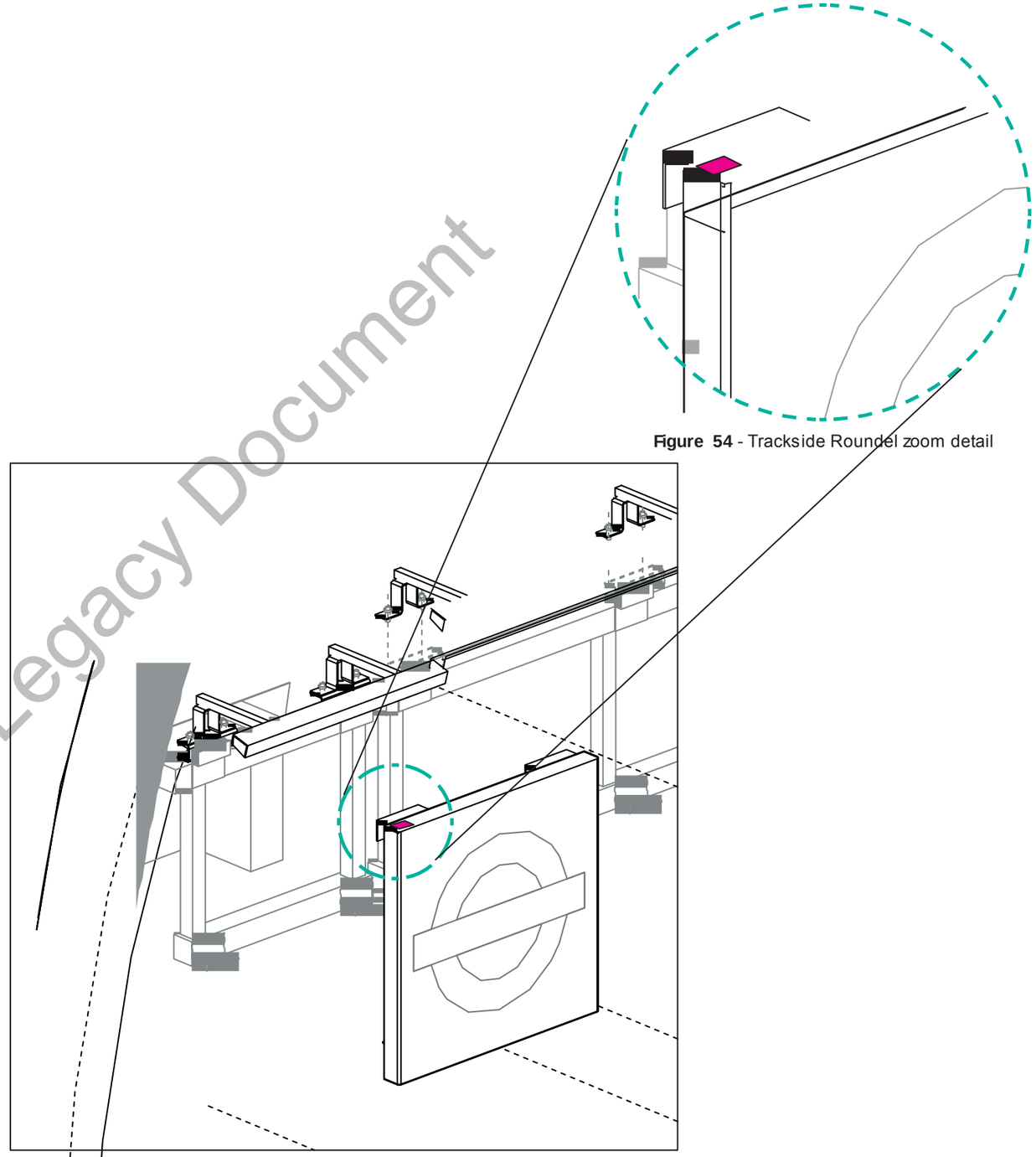

Figure 54 - Trackside Roundel zoom detail

Figure 53 - Trackside Roundel

Key - Inside label / rear side label Exterior label

Learning Legacy Document

4.10.5 Typical Integrated Bench + Roundel

References		
T-Sheet	**Name**	**Specification Reference**
FX-504	4 Seat Bench - Roundel Mounted	JN10

CRL Asset Class Code - L7473222 - NSS - Non-Switchable Signage	
Class Description (ADD Master Configuration Baseline)	Non-Switchable Signage relate to electronic displays or illuminated signs presenting a fixed message that can not be remotely changed.
Labelling Requirements (Asset Naming and Labelling Convention Document)	An asset tag label will be placed on a permanent structure next to the item in a position that can be viewed without the need for specialist access equipment or railway possessions and where the label will not be permanently covered.
General Labelling Guidance	• Position: Placed underneath the central section of bench roundel, in a central position. • Standard Size: Smallest possible size 58x8mm • Material Preference: Stainless Steel • Colour Preference: Stainless Steel with laser engraved black text.

Figure 56 - Integrated roundel - Exterior Label

Figure 55 - Typical integrated bench + Roundel

Key - Inside label / rear side label Exterior label

Learning Legacy Document

 © Crossrail Limited

4.11 Hatches / Manhole

References		
T-Sheet	**Name**	**Specification Reference**
FL-202 FL-602	Granite Insert Tile to Access Hatches Terrazzo Insert Tile to Access Hatches	JM40 (JM10 / JZ20 / JZ22)

CRL Asset Class Code - L412 - Hatches	
Class Description (ADD Master Configuration Baseline)	The Hatches class covers all types of access points and covers whether in walls roofs or floors, with the explicit exception of manhole covers which are listed separately. The whole hatch will be treated as a single asset.
Labelling Requirements (Asset Naming and Labelling Convention Document)	A hatch will have only a label for the asset tag attached to the physical item on the outer face of the opening section but shall not impair performance of the hatch.
General Labelling Guidance	• Position: Placed inside access panel, affixed to a permanent structure. • Standard Size: Smallest possible size 58x8mm • Material Preference: Acrylic • Colour Preference: White label with black text.

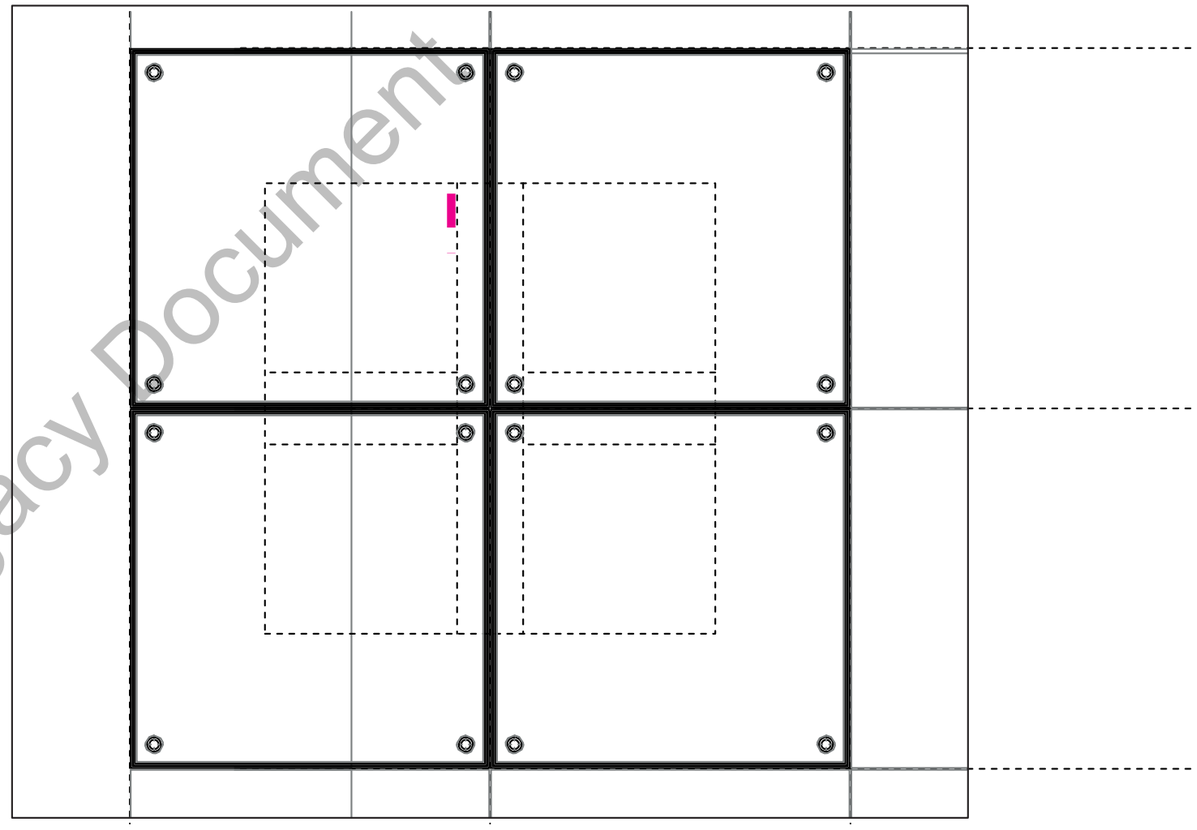

Figure 57 - Access Panel - Plan - Exterior Label

Key - Inside label / rear side label Exterior label

Learning Legacy Document

4.12 Station Clock

References		
T-Sheet	**Name**	**Specification Reference**
N/A	N/A	N/A

CRL Asset Class Code - L87352 - SCL - Station Clock	
Class Description (ADD Master Configuration Baseline)	The station clock displays the current time. It is connected to the master clock, which controls all the clocks on the network.
Labelling Requirements (Asset Naming and Labelling Convention Document)	An Asset Tag label will be placed on a permanent structure next to the item in a position that can be viewed without the need for specialist access equipment or railway possessions and where the label will not be permanently covered.
General Labelling Guidance	• Position: Inside the clock, affixed to a permanent steel structure • Standard Size: Smallest possible size 58x8mm • Material Preference: Acrylic (possible flexible material to adjust to curved surface) • Colour Preference: White label with black text.

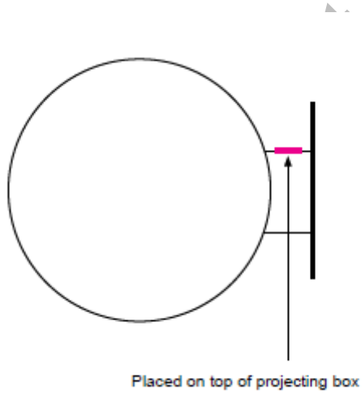

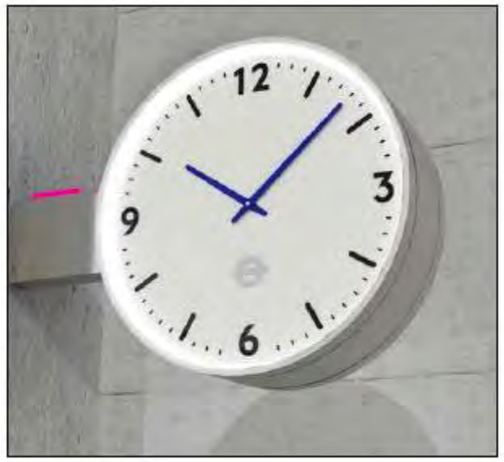

Figure 59 – Projecting wall mounted clock I

Figure 58 – Dropper Clock

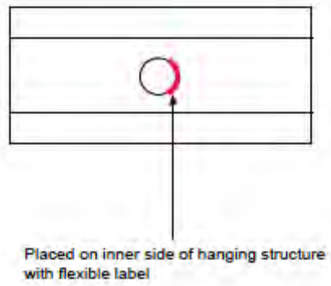

Key - Inside label / rear side label Exterior label

Learning Management

 © Crossrail Limited

4.13 Doors

4.13.1 Barrier Gate

References		
T-Sheet	**Name**	**Specification Reference**
DRS-501	Bostwick Gate	JL20

CRL Asset Class Code - L4412 - Barrier Gates	
Class Description (ADD Master Configuration Baseline)	A barrier gate is located at pedestrian and/ or vehicle entrance / exit points, and prevents the passage of unauthorised vehicles and/or people.
Labelling Requirements (Asset Naming and Labelling Convention Document)	An Asset Tag Label will be attached to place where the asset is to be located in a clearly visible location that will not impede its performance.
General Labelling Guidance	• Position: Placed on the central lock of boswick gates • Standard Size: Smallest possible size 58x8mm • Material Preference: Stainless Steel • Colour Preference: Stainless Steel with laser engraved black text.

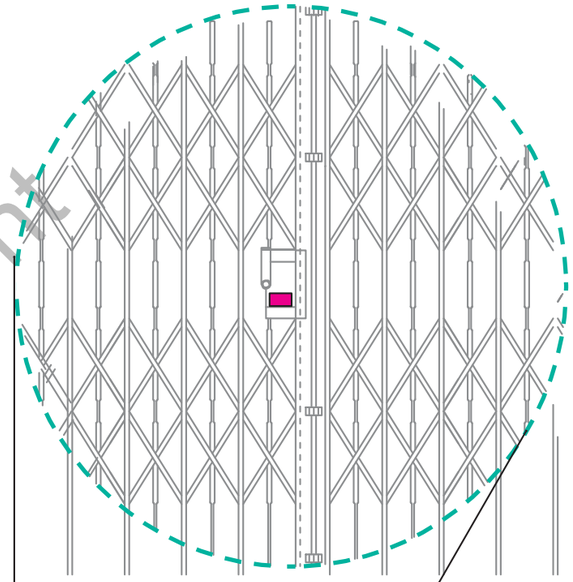

Figure 61 - Boswick Gate Lock - Exterior Label

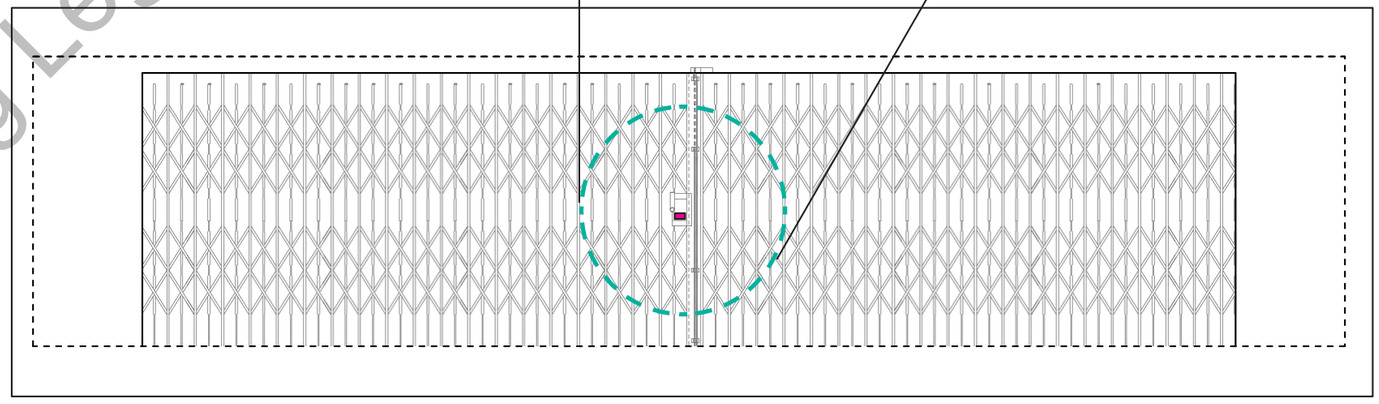

Figure 60 - Boswick Gate Elevation

Key - Inside label / rear side label | Exterior label

Learning Legacy Document

5. References

- C100 Architectural Components RIBA Stage F1 Drawings (Drawing Register Ref; C100-ATK-Z-LGL-CRG02-00002)
- C100 Architectural Components RIBA Stage F1 Specifications (Ref; C100-ATK-N2-RSP-CR002-00001)
- CRL-STD-015 Asset Identification Standard (Ref; CRL1-XRL-O6-STD-CR001-00031)
- Asset Tag & Equipment Label Guidance (Ref; CRL1-XRL-Z3-GUI-CR001-50040)
- Civils view of labelling.xlsx
- CRL1-XRL-Z3-ADDSD-CR001-50413 (4.0.).xlsx
- S1004 - Signage for Operational Purposes
- S1050 - Civil Engineering Common Requirements
- ADD Master Configuration Baseline

Learning Legacy Document

 © Crossrail Limited

Learning Legacy Document