ASSET DATA DICTIONARY DEFINITION DOCUMENT (AD4)
L215653 – SIGNAL RELAYS

Document Number: **CRL1-XRL-Z3-ADDSD-CR001-50439**

Document Revision: **3.0**

Learning Legacy Document

Document History:

Revision:	Date:	Prepared by:	Checked by:	Authorised by:	Reason for Issue:
1.0	24/04/14	[redacted]	[redacted]	[redacted]	First issue
2.0	19-Sep-2014	[redacted]	[redacted]	[redacted]	Description change Approvals Added Consultations Removed
3.0	27-Aug-2015	[redacted]	[redacted]	[redacted]	Labelling Section Updated

This document contains proprietary information. No part of this document may be reproduced without prior written consent from the chief executive of Crossrail Ltd.

Document uncontrolled once printed. All controlled documents are saved on the CRL Document System

© Crossrail Limited **RESTRICTED**

Learning Legacy Document

Document uncontrolled once printed. All controlled documents are saved on the CRL Document System
© Crossrail Limited RESTRICTED

Contents

1 Introduction 4
1.1 Asset Details 4
1.2 Description 4
1.3 Related Functions 4
2 Asset Tag Identification Rules 4
2.1 Example Images 5
3 Attributes 6
3.1 Generic Attributes 6
3.2 Class Specific Attributes 6
4 Performance Data 7
5 Labelling 7
6 Other Information 7
7 Reference Material 7
8 Crossrail Technical Approvals 8

Learning Legacy Document

Document uncontrolled once printed. All controlled documents are saved on the CRL Document System
© Crossrail Limited RESTRICTED

1 Introduction

Not Applicable

1.1 Asset Details

Class Code:	L215653
Class Name:	Signal Relays
Class Lineage:	Construction Products>Civil Engineering Works Products>Transport Control and Monitoring Products>Signalling Products>Automatic Train Control>Train Supervision Systems>Signal Relays

1.2 Description

A Relay is an electrically operated switch and is used where it is necessary to control a circuit by a low power signal or where several circuits must be controlled by one signal. Relay units are normally used in conjunction with relays in signalling circuits and consist of components such as transformer/rectifiers, timers, resistor units etc.

Signalling relays are designed to fail-safe signalling standards and are accepted by the railway industry to provide vital operating characteristics. Such relays are guarded against failures such as the fusing or welding of their contacts, and, if they fail, the failure is to a safe or restrictive mode of operation.

1.3 Related Functions

All information on the configuration of asset classes (L-Class) to functions is contained within the latest revision of the Asset Data Dictionary Master Configuration document (eB ref: CRL1-XRL-Z3-ADDSD-CR001-50186)

2 Asset Tag Identification Rules

Assets will be identified as required by the Asset Identification Standard (CRL1-XRL-O6-STD-CR001-00031), in the following format:

<LCS Code>-<Function Code>-<Incremental number to ensure uniqueness>

e.g. C125-TSP-12345

Information and guidance on the standard naming convention for all asset classes is contained within the latest revision of the Asset Naming Convention Document (eB ref: CRL1-XR1-Z3-ADDSD-CR001-50413).

Learning Legacy Document

Document uncontrolled once printed. All controlled documents are saved on the CRL Document System

© Crossrail Limited RESTRICTED

2.1 Example Images

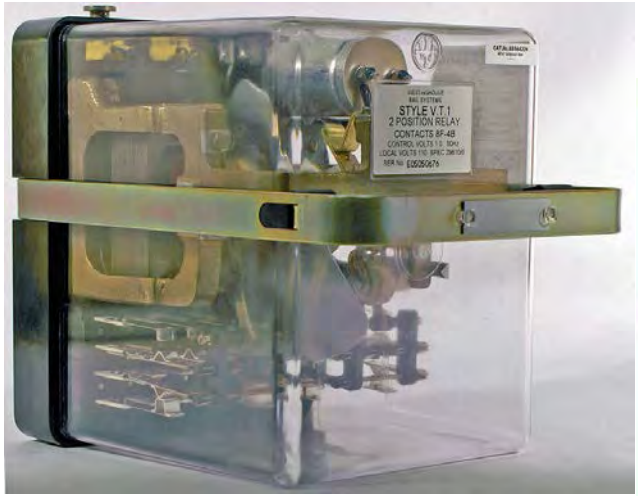

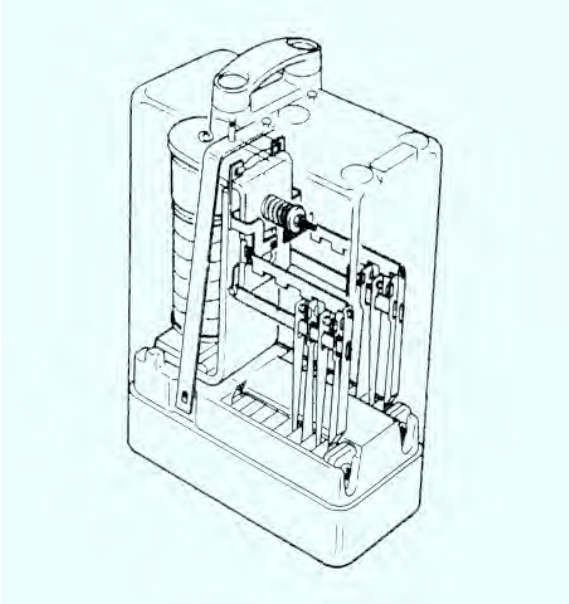

Learning Legacy Document

Document uncontrolled once printed. All controlled documents are saved on the CRL Document System
© Crossrail Limited RESTRICTED

3 Attributes

3.1 Generic Attributes

All Classes of assets will have a set of Generic Attributes for which data is collected without exception. Full details relating to these assets can be found at:

AD4 – Generic Attributes CRL1-XRL-Z3-ADDSD-CR001-50069

3.2 Class Specific Attributes

Below is a table of the further specific attributes which are associated with this asset class.

Attribute Name	**Base Unit or Formula**	**Value Type** (See Below)	**Decimal Places** (nu Only)	**Defined Values List** (pd only)	**Description**
Output Voltage (Volts)	Volts	NU	0		Output Voltage of Relay
Power Rating (Watts)	Watts	NU	0		Output power rating of Relay
Number of Outputs (#)	#	NU	0		Elements receiving output signal
Input Voltage (Volts)	Volts	NU	0		Input Voltage of Relay
Relay Type		CH			Type of relay in use
Relay Pin Codes		CH			Pin Code for connection authority

pd = Predefined List (Listed Values Only)
nu = Numeric (dp and number format can be stipulated)
ch = Free text (Max 255 Characters)
da = Date (dd-mm-yyyy)
me = Memo (Free text 1GB Limit)

Learning Legacy Document

Document uncontrolled once printed. All controlled documents are saved on the CRL Document System

© Crossrail Limited RESTRICTED

4 Performance Data

This section is to be used to specify the performance data to be gathered from this Class of asset when in operation. To be populated once the performance measures have been agreed with the Infrastructure Managers.

5 Labelling

Information and guidance on the standard labelling convention for all asset classes is contained within the latest revision of the Asset Naming and Labelling Convention Document (eB ref: CRL1-XR1-Z3-ADDSD-CR001-50413).

6 Other Information

Not Applicable

7 Reference Material

- Asset Data Dictionary Master Configuration document - CRL1-XRL-Z3-ADDSD-CR001-50186
- Asset Identification Standard - CRL1-XRL-O6-STD-CR001-00031
- AD4 – Generic Attributes - CRL1-XRL-Z3-ADDSD-CR001-50069
- <ADD OTHER REFERENCE DOCUMENTS HERE>

Learning Legacy Document

Document uncontrolled once printed. All controlled documents are saved on the CRL Document System

© Crossrail Limited RESTRICTED

8 Crossrail Technical Approvals

Name	Role	Date
[redacted]	Signalling Manager	19-Sep-2014

Learning Legacy Document

Document uncontrolled once printed. All controlled documents are saved on the CRL Document System
© Crossrail Limited RESTRICTED