ASSET DATA DICTIONARY DEFINITION DOCUMENT (AD4)
L82255 - Benches

Document Number: **CRL1-XRL-Z3-ADDSD-CR001-50380**

Document Revision: **5.0**

Learning Legacy Document

Document History:

Revision:	Date:	Prepared by:	Checked by:	Authorised by:	Reason for Issue:
1.0	11-Oct-2013	[redacted]	[redacted]	[redacted]	First Issue
2.0	03-Jun-2014	[redacted]	[redacted]	[redacted]	Asset Tag Identification Section Updated
3.0	24-Jun-2014	[redacted]	[redacted]	[redacted]	Description change IMP-0004.127
4.0	19-Sep-2014	[redacted]	[redacted]	[redacted]	Approvals Added Consultations Removed
5.0	27-Aug-2015	[redacted]	[redacted]	[redacted]	Labelling Section Updated

This document contains proprietary information. No part of this document may be reproduced without prior written consent from the chief executive of Crossrail Ltd.

Document uncontrolled once printed. All controlled documents are saved on the CRL Document System

© Crossrail Limited **RESTRICTED**

Contents

1 Introduction 3
1.1 Asset Details 3
1.2 Description 3
1.3 Related Functions 3
2 Asset Tag Identification Rules 4
2.1 Example Images 4
3 Attributes 5
3.1 Generic Attributes 5
3.2 Class Specific Attributes 5
4 Performance Data 6
5 Labelling 6
6 Other Information 6
7 Reference Material 6
8 Crossrail Technical Approvals 7

Learning Legacy Document

Document uncontrolled once printed. All controlled documents are saved on the CRL Document System
© Crossrail Limited RESTRICTED

1 Introduction

1.1 Asset Details

Class Code:	L82255
Class Name:	Benches
Class Lineage:	Construction Products>Description>Fixtures and furnishings >Domestic and general furniture and fittings>Living and dining room furniture>TBC>Benches

1.2 Description

A bench is a piece of furniture on which several people may sit at the same time.

1.3 Related Functions

All information on the configuration of asset classes (L-Class) to functions is contained within the latest revision of the Asset Data Dictionary Master Configuration document (eB ref: CRL1-XRL-Z3-ADDSD-CR001-50186)

Learning Legacy Document

Document uncontrolled once printed. All controlled documents are saved on the CRL Document System

© Crossrail Limited RESTRICTED

2 Asset Tag Identification Rules

Assets will be identified as required by the Asset Identification Standard (CRL1-XRL-O6-STD-CR001-00031) in the following format:

<LCS Code>-<Function Code>-<Incremental number to ensure uniqueness>

e.g. CR076-BAF-12345

Information and guidance on the standard naming convention for all asset classes is contained within the latest revision of the Asset Naming Convention Document (eB ref: CRL1-XR1-Z3-ADDSD-CR001-50413).

2.1 Example Images

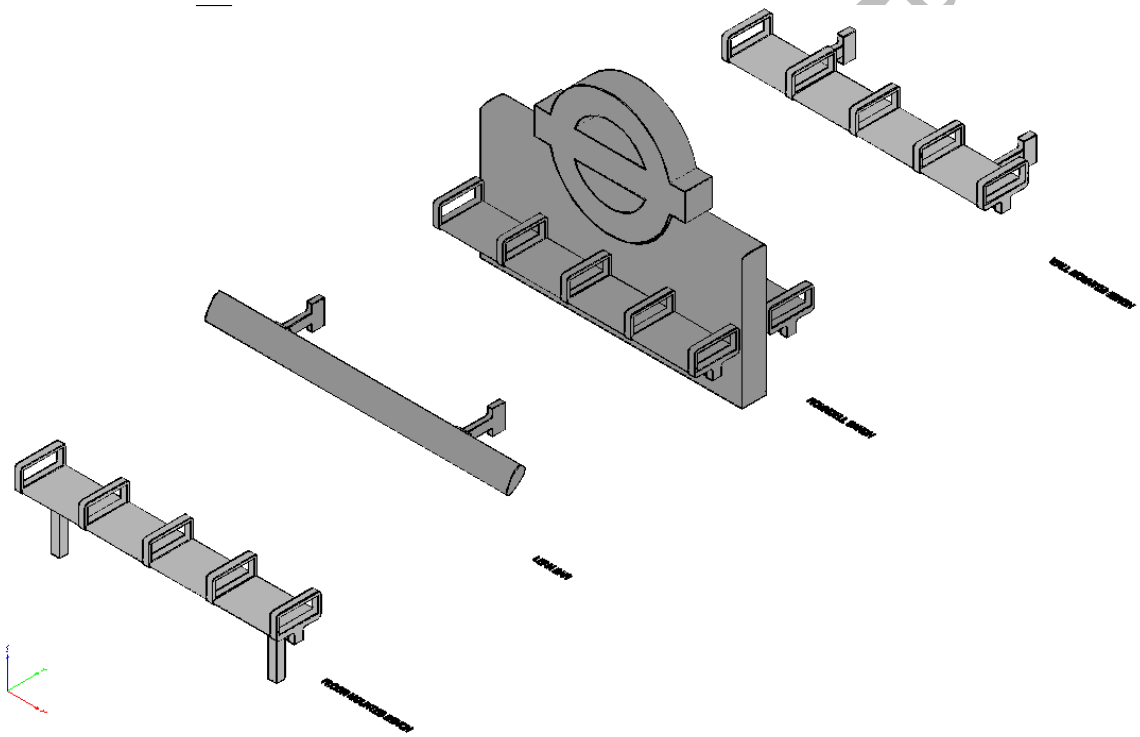

Legacy Document

Document uncontrolled once printed. All controlled documents are saved on the CRL Document System

© Crossrail Limited RESTRICTED

3 Attributes

3.1 Generic Attributes

All Classes of assets will have a set of Generic Attributes for which data is collected without exception. Full details relating to these assets can be found at:

AD4 – Generic Attributes CRL1-XRL-Z3-ADDSD-CR001-50069

3.2 Class Specific Attributes

Below is a table of the further specific attributes which are associated with this asset class.

Attribute Name	**Base Unit or Formula**	**Value Type** (See Below)	**Decimal Places** (nu Only)	**Defined Values List** (pd only)	**Description**
Length (Metres)	Metres	NU	2		The total length of the asset

pd = Predefined List (Listed Values Only)
nu = Numeric (dp and number format can be stipulated)
ch = Free text (Max 255 Characters)
da = Date (dd-mm-yyyy)
me = Memo (Free text 1GB Limit)

Learning Legacy Document

Document uncontrolled once printed. All controlled documents are saved on the CRL Document System

© Crossrail Limited RESTRICTED

4 Performance Data

This section is to be used to specify the performance data to be gathered from this Class of asset when in operation. To be populated once the performance measures have been agreed with the Infrastructure Managers.

5 Labelling

Information and guidance on the standard labelling convention for all asset classes is contained within the latest revision of the Asset Naming and Labelling Convention Document (eB ref: CRL1-XR1-Z3-ADDSD-CR001-50413).

6 Other Information

Not Applicable

7 Reference Material

- Asset Data Dictionary Master Configuration - CRL1-XRL-Z3-ADDSD-CR001-50186
- Asset Identification Standard - CRL1-XRL-O6-STD-CR001-00031
- AD4 – Generic Attributes - CRL1-XRL-Z3-ADDSD-CR001-50069
- Asset Naming Convention Document - CRL1-XR1-Z3-ADDSD-CR001-50413

Learning Legacy Document

Document uncontrolled once printed. All controlled documents are saved on the CRL Document System

© Crossrail Limited RESTRICTED

8 Crossrail Technical Approvals

Name	Role	Date
[redacted]	Head of Architecture	19-Sep-2014

Learning Legacy Document

Document uncontrolled once printed. All controlled documents are saved on the CRL Document System
© Crossrail Limited RESTRICTED