ASSET DATA DICTIONARY DEFINITION DOCUMENT (AD4)
L7825 - CABLE CONTAINMENT

Learning Legacy Document

Document Number: **CRL1-XRL-Z3-ADDSD-CR001-50792**

Document Revision: **9.0**

Document History:

Revision:	Date:	Prepared by:	Checked by:	Authorised by:	Reason for Issue:
1.0	15-Feb-2016	[redacted]	[redacted]	[redacted]	First Issue
2.0	11-May-2016	[redacted]	[redacted]	[redacted]	Attribute added
3.0	30-Aug-2016	[redacted]	[redacted]	[redacted]	Attribute Added
4.0	21-Nov-2016	[redacted]	[redacted]	[redacted]	Attribute added
5.0	20-Dec-2016	[redacted]	[redacted]	[redacted]	Attribute removed
6.0	19-Apr-2017	[redacted]	[redacted]	[redacted]	Description updated
7.0	19-Apr-2017	[redacted]	[redacted]	[redacted]	Description updated – minor correction from 6.0
8.0	20-Apr-2017	[redacted]	[redacted]	[redacted]	Attribute Replaced
9.0	25-Apr-2017	[redacted]	[redacted]	[redacted]	LRS Codes Updated

This document contains proprietary information. No part of this document may be reproduced without prior written consent from the chief executive of Crossrail Ltd.

Document uncontrolled once printed. All controlled documents are saved on the CRL Document System

© Crossrail Limited **RESTRICTED**

Learning Legacy Document

Document uncontrolled once printed. All controlled documents are saved on the CRL Document System
© Crossrail Limited RESTRICTED

Contents

1 Introduction 4
1.1 Asset Details 4
1.2 Description 4
1.3 Related Functions 4
2 Asset Tag Identification Rules 4
2.1 Example Images 5
3 Attributes 7
3.1 Generic Attributes 7
3.2 Class Specific Attributes 7
4 Performance Data 10
5 Labelling 10
6 Other Information 10
7 Reference Material 10
8 Crossrail Technical Approvals 11

Learning Legacy Document

Document uncontrolled once printed. All controlled documents are saved on the CRL Document System
© Crossrail Limited RESTRICTED

1 Introduction

1.1 Asset Details

Class Code:	L7825
Class Name:	Cable Containment
Class Lineage:	Construction Products>Services>General purpose and ancillary services products>Services supports and enclosures> Cable Containment

1.2 Description

Cable Containment, or CMS, describes any method of enclosing, supporting, protecting or routing of cabling (e.g. power distribution cables, communication, etc.). The containment can be rigid or flexible and is situated within tunnels and buildings.

A single Asset Tag groups together all the conduits, Trunking, Trays and Ladders that relate to each independent system in a facility. To clarify what constitutes a Cable Containment System the following should be used:-

All CMS items that are connected with each other (via other CMS items) will form a single Asset Tag. Where Cable Containment is isolated from other Cable Containment, i.e. not physically connected then these will require their own unique Asset Tag accept where an obvious continuation features a gap but the cable/s being contained form a link e.g. around a corner/bend or through a wall penetration.

1.3 Related Functions

All information on the configuration of asset classes (L-Class) to functions is contained within the latest revision of the Asset Data Dictionary Master Configuration document (eB ref: CRL1-XRL-Z3-ADDSD-CR001-50186)

2 Asset Tag Identification Rules

Assets will be identified as required by the Asset Identification Standard (CRL1-XRL-O6-STD-CR001-00031) in the following format:

<LCS Code>-<Function Code>-<Incremental number to ensure uniqueness>

e.g. CR076-BAF-12345

Information and guidance on the standard naming convention for all asset classes is contained within the latest revision of the Asset Naming Convention Document (eB ref: CRL1-XR1-Z3-ADDSD-CR001-50413).

Learning Legacy Document

Document uncontrolled once printed. All controlled documents are saved on the CRL Document System

© Crossrail Limited RESTRICTED

2.1 Example Images

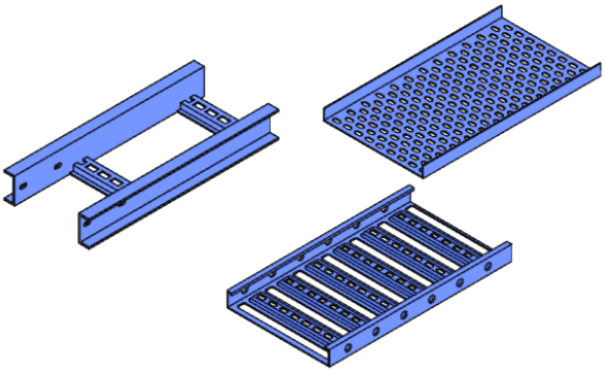

Figure 1 Cable trays and ladders

Figure 2 single compartment Trunking

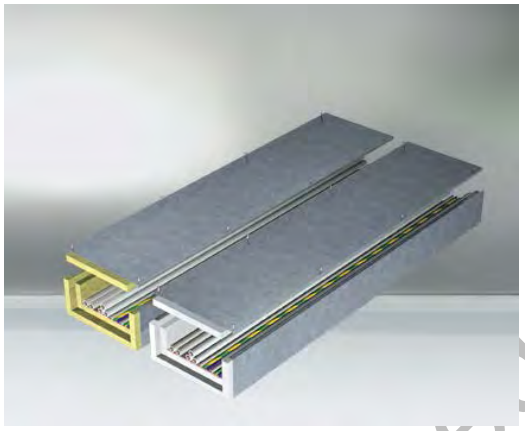

Figure 3 Cable troughs

Figure 4 Cable Ducts

Figure 5 multi compartment trunking

Figure 6 Dado trunking

Document uncontrolled once printed. All controlled documents are saved on the CRL Document System

© Crossrail Limited RESTRICTED

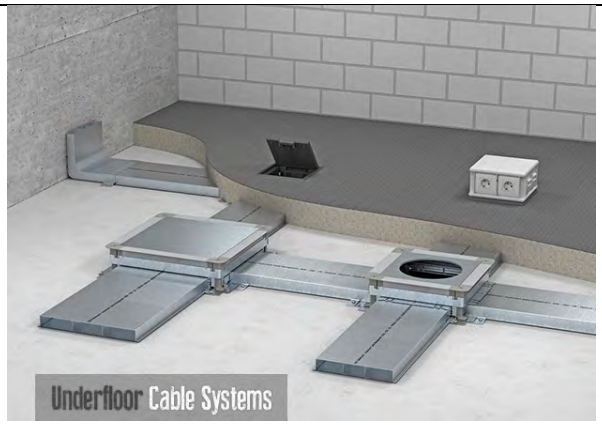

Figure 7 Underfloor trunking

Figure 8 cable basket

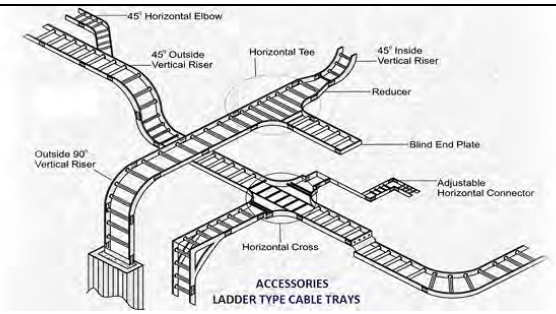

Figure 9 typical cable ladder installation

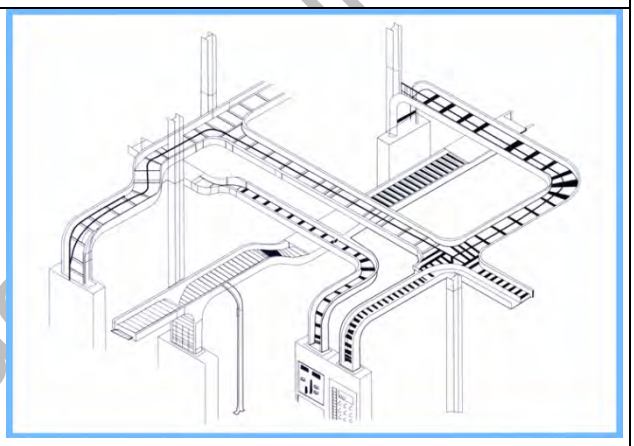

Figure 10 typical cable tray installation

Learning Legacy Document

Document uncontrolled once printed. All controlled documents are saved on the CRL Document System

© Crossrail Limited RESTRICTED

3 Attributes

3.1 Generic Attributes

All Classes of assets will have a set of Generic Attributes for which data is collected without exception. Full details relating to these assets can be found at:

AD4 – Generic Attributes CRL1-XRL-Z3-ADDSD-CR001-50069

3.2 Class Specific Attributes

Below is a table of the further specific attributes which are associated with this asset class.

Attribute Name	**Base Unit or Formula**	**Value Type** (See Below)	**Decimal Places** (nu Only)	**Defined Values List** (pd only)	**Description**
Height (Millimetres)	Millimetres	NU	0		External Height of Containment
Length (Metres)	Metres	NU	2		Length of each section (between joints) of containment
Thickness (Millimetres)	Millimetres	NU	0		Thickness of containment walls
Containment Material		PD		Concrete Metal GRC GRP	Material of containment
Depth (Millimetres)	Millimetres	NU	0		The Depth where the item is a cable Tray or Troughing only.
Duty		PD		Heavy Light Medium Not Applicable	Conduit, Trunking and Trays have a Duty classification of Heavy, Medium or Light.
Troughing Type		PD		Surface Troughing Elevated Troughing Not Applicable	Type where containment is of the troughing kind.

Document uncontrolled once printed. All controlled documents are saved on the CRL Document System

© Crossrail Limited RESTRICTED

Learning Legacy Document

Attribute Name	**Base Unit or Formula**	**Value Type** (See Below)	**Decimal Places** (nu Only)	**Defined Values List** (pd only)	**Description**
Troughing Weight (Kilograms)	Kilograms	NU	2		Weight of each section where Containment is Troughing type.
Meterage (Metres)	Metres	NU	0		Meterage (Chainage) location of asset. To be populated only when the asset is located on track.
LRS Code		PD		C.EB C.EB.CRW5 C.EB.CR1 C.EB.CR7 C.EB.TBC C.WB C.WB.CRW9 C.WB.CRW6 C.WB.CR2 C.WB.CR5 C.WB.TBA C.WB.TBB CNE.EB CNE.WB CSE.EB CSE.EB.CR11 CSE.WB CSE.EB.CR13 CSE.WB.CR15 Non Track	The Crossrail Linear Referencing Standard code (CRL1-XRL-O6-STD-CR001-00026) where the asset is located. When the asset is not located on track then non track should be selected. The LRS codes are as follows: C.EB - Central Section Eastbound C.EB.CRW5 - Crossover between W5 and W4 Points C.EB.CR1 - Crossover between C1 and C4 Points C.EB.CR7 - Crossover between C7 and C8 Points C.EB.TBC - Turnback C C.WB - Central Section Westbound C.WB.CRW9 - Crossover between W9 and W8 Points C.WB.CRW6 - Crossover between W6 and W3 Points C.WB.CR2 - Crossover between C2 and C3 Points C.WB.CR5 - Crossover between C5 and C6 Points C.WB.TBA - Turnback A C.WB.TBB - Turnback B CNE.EB - Central Section North East Spur Eastbound CNE.WB - Central Section North East Spur Westbound CSE.EB - Central Section South East Spur Eastbound CSE.EB.CR11 - Crossover between C11 and C12 Points CSE.WB - Central Section South East Spur Westbound CSE.EB.CR13 - Crossover between C13 and C14 Points CSE.WB.CR15 - Crossover between C15 and C16 Points Non Track - Non Track Assets
Fire Rating		PD		30 60	The fire rating, in minutes, of the cable containment.

nu = Numeric (dp and number format can be stipulated)

Document uncontrolled once printed. All controlled documents are saved on the CRL Document System

© Crossrail Limited RESTRICTED

Learning Legacy Document

pd = Predefined List (Listed Values Only)

Learning Legacy Document

Document uncontrolled once printed. All controlled documents are saved on the CRL Document System

© Crossrail Limited RESTRICTED

4 Performance Data

This section is to be used to specify the performance data to be gathered from this Class of asset when in operation. To be populated once the performance measures have been agreed with the Infrastructure Managers. **This section to include corrosion resistance category as prescribed within M&W specifications:**

- **JY60 (CRL1-XRL-M-RSP-CR001-500079)**
- **JY63 (CRL1-XRL-M-RSP-CR001-500081)**

5 Labelling

Information and guidance on the standard labelling convention for all asset classes is contained within the latest revision of the Asset Naming and Labelling Convention Document (eB ref: CRL1-XR1-Z3-ADDSD-CR001-50413).

6 Other Information

Not Applicable

7 Reference Material

- Asset Data Dictionary Master Configuration - CRL1-XRL-Z3-ADDSD-CR001-50186
- Asset Identification Standard - CRL1-XRL-O6-STD-CR001-00031
- AD4 – Generic Attributes - CRL1-XRL-Z3-ADDSD-CR001-50069
- Asset Naming Convention Document - CRL1-XR1-Z3-ADDSD-CR001-50413

Learning Legacy Document

Document uncontrolled once printed. All controlled documents are saved on the CRL Document System

© Crossrail Limited RESTRICTED

8 Crossrail Technical Approvals

Name	Role	Date
[redacted]	Lead Mechanical & Electrical Plant (MEP) Engineer	30/03/2016

Learning Legacy Document

Document uncontrolled once printed. All controlled documents are saved on the CRL Document System
© Crossrail Limited RESTRICTED